ArtNC

ArtNC2 Series AC Servo Drive

OWNER'S/OPERATOR'S MANUAL

Prolm

Version date: 2022-08-10

CONTENTS

Chapter 1 Safety Precautions 1
Chapter 2 Electrical Specifications 2
2.1 Specification 2
2.2 Combination of drive model and motor 3
Chapter 3 Installation 4
3.1 Installation of servo drive unit 4
3.1.1 Installation environment 4
3.1.2 Installation method 4
3.1.3 Installation size 5
3.2 Installation of servo motor 5
3.2.1 Installation environment 5
3.2.2 Installation method 6
Chapter 4 Wiring 6
4.1 Terminal Descriptions 6
4.2 Main circuit wiring 7
4.2.1 Definition of main circuit terminal 7
4.2.2 Using method for main circuit power terminal (spring type) 8
4.2.3 Main circuit wiring 8
4.3 Definition of wiring terminal 9
4.3.1 Definition of communication terminal（CN1/CN2） 9
4.3.2 Definition of Control Terminal (NC3) 10
4.3.2 Definition of Encoder Terminal (NC4) 11
4.4 Wiring principle of control signal terminal 12
4.4.1 DI Input Circuit 12
4.4.2 High-speed pulse input circuit 12
4.4.3 DO output circuit 13
4.4.4 Analog Input Circuit 14
4.4.5 Pulse Feedback Output Circuit 14
4.5 DI/DO port function configuration details 15
4.5.1 DI Command Description 15
4.5.2 DI port control mode 18
4.5.3 DO Command Description 19
Chapter 5 Description of Control Mode 21

5.1 Position mode description 21
5.1.1 Position Mode Wiring Diagram 21
5.1.2 Related Functions of External Position Mode 22
5.1.3 Position mode communication control 23
5.2 Speed mode description 25
5.2.1 Wiring diagram at speed mode 25
5.2.2 Related functions of external speed mode 26
5.2.3 Communication control switching internal speed 28
5.3 Torque mode specification 29
5.3.1 Wiring diagram of torque mode 29
5.3.2 Related functions of external torque mode 29
5.3.3 Related functions of external torque mode 30
5.4 Gain parameter adjustment 32
Chapert 6 Description of parameters 35
6.1 Description of basic parameters 34
6.2 Extended Parameter Description 50
Chapter 7 Panel Display and Button Description 62
7.1 Introduction to the button interface 62
7.2 Schematic diagram of each mode switching 62
7.3 Monitoring parameter switching 63
7.4 Operation instructions 66
7.4.1 Parameter setting 66
7.4.2 JOG mode 67
7.4.3 Initialization parameter 68
7.4.4 Servo back to zero 69
7.4.5 Alarm Clearing 69
Chapter 8 Alarm Description 70
Chapter 9 MODBUS RTU Agreement 73
9.1 Read Parameter Command 73
9.2 Write Single Register Command (0x06) 74
9.3 Write Multi-Register Command (0x10) 75
9.4 Abnormal response and error codes 76
9.5 Communication saving parameters 76
Appendix: Servo zeroing mode 77

Chapter 1 Safety Precautions

Before using the servo drive system, please read the precautions for the equipment carefully and follow the safety precautions and operating procedures for installation and commissioning. The company is exempt from liability for equipment damage or personal injury caused by failure to operate as required.

◆This product is a general industrial product, and it is not intended for use by machines and systems involved life.

◆Please engage professional qualified personnel to perform wiring, operation, maintenance and inspection.

◆If it is applied to a device that may cause a major accident or loss, please equip it with a safety device.

◆Although this product has considered many aspects in terms of quality management, it may cause unexpected external action due to unexpected noise, static electricity, input power, wiring, parts. Please fully consider mechanical safety measures to ensure safety within possible range of action.

Chapter 2 Electrical Specifications

2.1 Specification

Input power	CONTROL POWER	Single phase 220 VAC
	MAIN POWER SUPPLY	Single Phase/Three Phase 220VAC
Working environment	Temperature	0～45℃
	Humidity	No condensation ≤90% RH or less
	Elevation	Altitude ≤1000M
	Installation environment	Non-corrosive gases, flammable gases, oil mist or dust, etc.
	Installation method	VERTICAL INSTALLATION
Encoder feedback		2500 p/r (resolution: 10000), incremental encoder
Control signal	Digital Input	10 channels of normal digital input, with configurable function.
	Digital Output	6 channels of normal digital input, with configurable function.
Pulse signals	Input	2 high-speed inputs: differential (600K) and single-ended (200K) pulses. Support pulse input mode: PULS+DIR, A+B, CW+CCW
	Output	3-way high-speed pulse output, output signal form: 5V differential signal. 1-way Z signal single-ended output signal.
Analog quantity signal	Input	2-way analog inputs, 12-bit resolution, input range -9.5 to +9.5V. Where AI2 is fixed as the torque limit input.
	Output	None
Messaging function		RS485 communication, Modbus protocol. The main controller can control the position/speed/torque of the servo via RS485, up to 32 control stations.
Display panel and button operation		5 buttons (Mode, Set, Left, Up, Down) and 6 digital tubes
Regenerative discharge braking resistor		Built-in 100W40Ω braking resistor. An external braking resistor is required for frequent braking.

2.2 Combination of drive model and motor

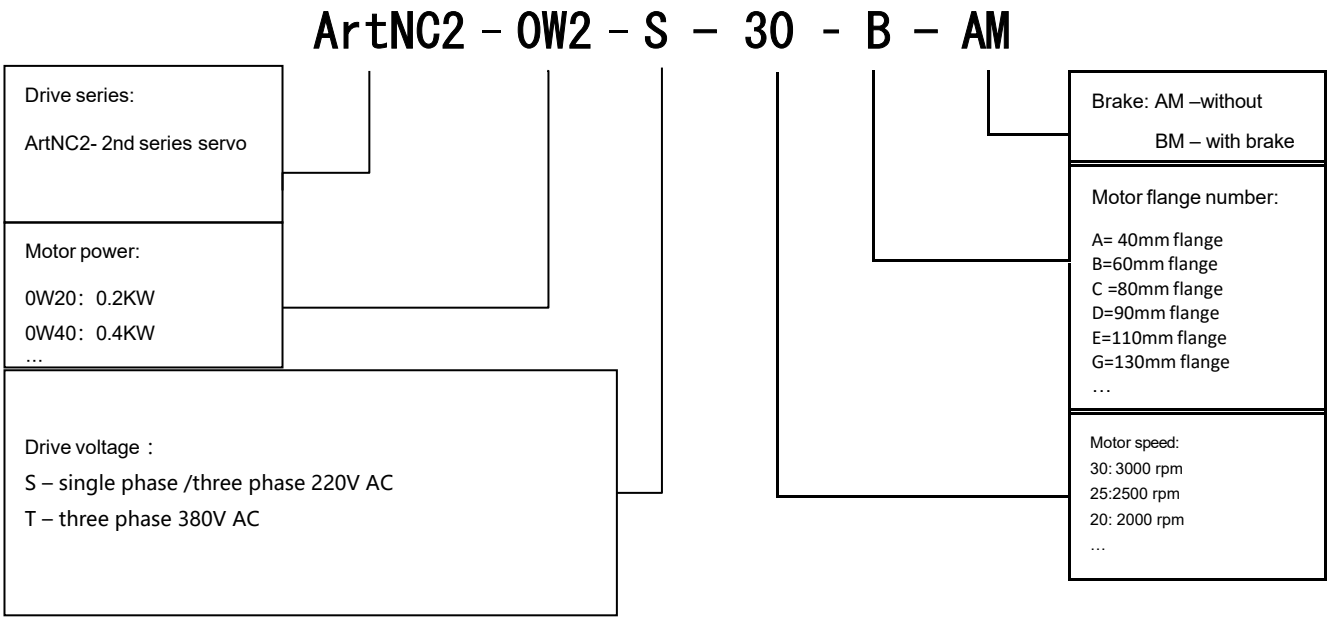

Driver model	Motor Model	Power	
ArtNC2-0W05S	ArtNC2-0W05S30AAM	50W (1phase AC220V)	0.16N.m / 3000Rpm
ArtNC2-0W10S	ArtNC2-0W10S30AAM	100W(1phase AC220V)	0.32N.m / 3000Rpm
ArtNC2-0W20S	ArtNC2-0W20S30BAM	200W (1phase AC220V)	0.637N.m / 3000Rpm
ArtNC2-0W40S	ArtNC2-0W40S30BAM	400W (1phase AC220V)	1.27N.m / 3000Rpm
ArtNC2-0W60S	ArtNC2-0W60S30BAM	600W (1phase AC220V)	1.91N.m / 3000Rpm
ArtNC2-0W75S	ArtNC2-0W75S30CAM	750W (1phase AC220V)	2.4N.m / 3000Rpm
ArtNC2-0W75S	ArtNC2-0W75S20CAM	750W (1phase AC220V)	3.5N.M / 2000Rpm
ArtNC2-1W00S	ArtNC2-1W00S25CAM	1kW (1phase AC220V)	4N.M / 2500Rpm
ArtNC2-0W75S	ArtNC2-0W75S30DAM	750W (1phase AC220V)	2.4N.m / 3000Rpm
ArtNC2-0W75S	ArtNC2-0W75S20DAM	750W (1phase AC220V)	3.5N.m / 2000Rpm
ArtNC2-1W00S	ArtNC2-1W00S25DAM	1KW (1phase AC220V)	4N.m / 2500Rpm
ArtNC2-1W20S	ArtNC2-1W20S30EAM	1.2KW (3phase AC220V)	4N.m / 3000Rpm
ArtNC2-1W50S	ArtNC2-1W50S30EAM	1.5KW (3phase AC220V)	5N.m / 3000Rpm
ArtNC2-1W20S	ArtNC2-1W20S20EAM	1.2KW (3phase AC220V)	6N.m / 2000Rpm
ArtNC2-1W80S	ArtNC2-1W80S30EAM	1.8KW (3phase AC220V)	6 N.M / 3000Rpm
ArtNC2-1W00S	ArtNC2-1W00S25GAM	1KW (3phase AC220V)	4 N.M / 2500Rpm
ArtNC2-1W30S	ArtNC2-1W30S25GAM	1.3KW (3phase AC220V)	5 N.M / 2500Rpm
ArtNC2-1W50S	ArtNC2-1W50S25GAM	1.5KW (3phase AC220V)	6 N.M / 2500Rpm
ArtNC2-2W00S	ArtNC2-2W00S25GAM	2KW (3phase AC220V)	7.7 N.M / 2500Rpm
ArtNC2-1W00S	ArtNC2-1W00S10GAM	1KW (3phase AC220V)	10N.M / 1000Rpm
ArtNC2-1W50S	ArtNC2-1W50S15GAM	1.5KW (3phase AC220V)	10N.M / 1500Rpm
ArtNC2-2W60S	ArtNC2-2W60S25GAM	2.6KW (3phase AC220V)	10N.M / 2500Rpm
ArtNC2-2W30S	ArtNC2-2W30S15GAM	2.3KW (3phase AC220V)	15N.M / 1500Rpm

Chapter 3 Installation

Warning

- The storage and installation of the product must meet environmental conditions.
- Products that are damaged or with incomplete parts must not be installed.
- The product installation shall be made of fireproof materials and shall not be installed on or near inflammable materials to prevent fire.
- The servo drive unit must be installed in the cabinet to prevent ingress of dust, corrosive gases, conductive objects, liquids, and flammable materials.
- The servo drive unit and servo motor should be protected from vibration and must not be subjected to impact.
- Do not drag the servo motor wires and encoder wires.

3.1 Installation of servo drive unit

Note

- The servo drive unit must be installed in a well-protected electrical cabinet.
- The servo drive unit must be installed in the specified direction and spacing to ensure good heat dissipation.
- It shall not be installed on or near inflammable materials to prevent fire.

3.1.1 Installation environment

- **Use temperature/humidity:** 0 ~ 55 ° C (no frost), 90% RH or less (no condensation).
- **Storage temperature / humidity:** -20 ~ 65 ° C (no frost), 90% RH or less (no condensation).
- **Atmospheric environment:** Inside the control cabinet, no corrosive, flammable gas, oil mist, dust, etc.
- **Elevation:** below 1000m.
- **Vibration:** less than 0.5G (4.9m/s2), 10 to 60 Hz (non-continuous operation).
- **Protection:** The servo drive's own structure is unprotected, so it must be installed in a well-protected electrical cabinet to prevent intrusion of corrosive, flammable gases, conductive objects, metal dust, oil mist and liquids.

3.1.2 Installation method

- The servo drive of our company is a vertical structure, please install it vertically. The mounting direction is perpendicular to the mounting surface.
- The layout of single or multiple servo drives is shown below.

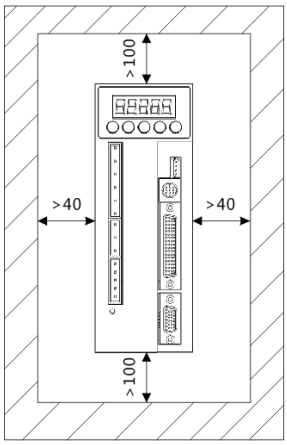

Installation interval for single servo drive unit

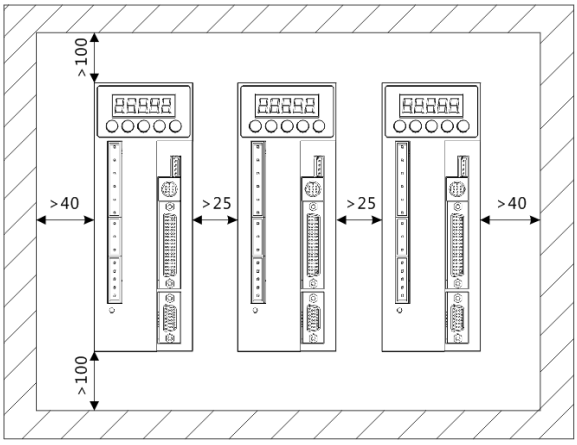

Installation interval for multiple servo units

3.1.3 Installation size

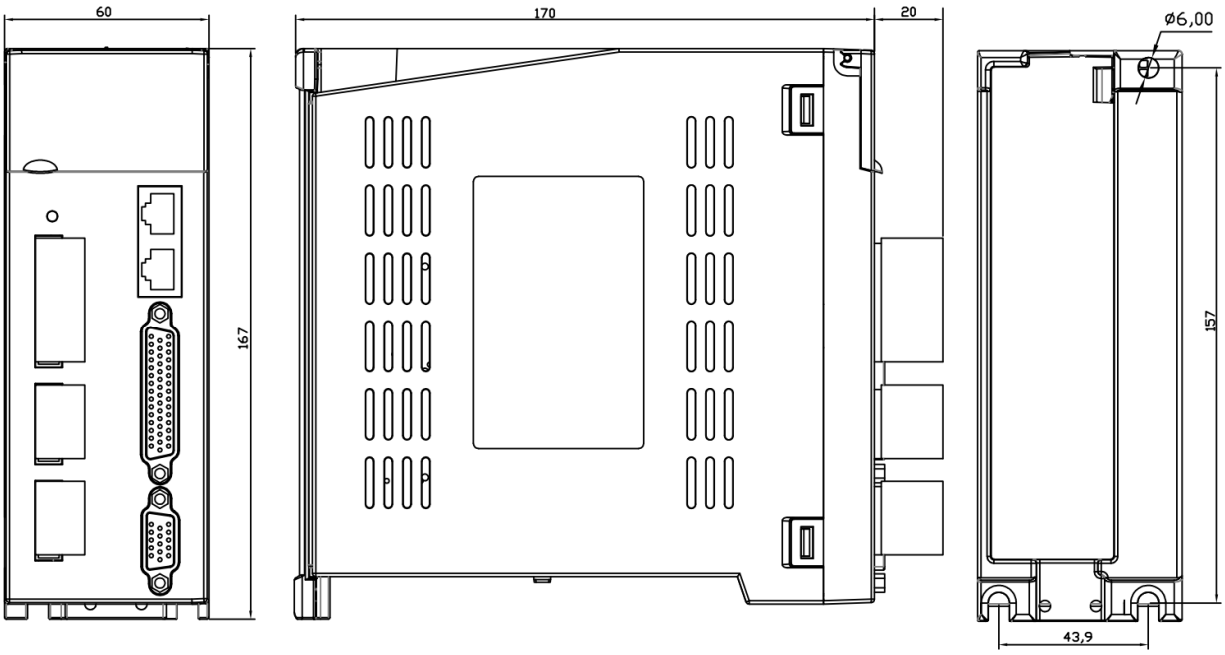

3.2 Installation of servo motor

Warning

● Do not hit the shaft end of the motor, otherwise the motor encoder may be damaged.

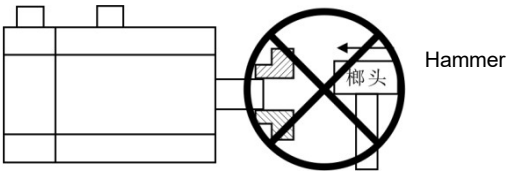

3.2.1 Installation environment

◆ Use temperature/humidity: 5~40° C (no frost), 90% RH or less (no condensation).

- Storage temperature / humidity: -20~55 ° C (no frost), 90% RH or less (no condensation).
- Atmospheric environment: Indoor, no corrosive, flammable gas, oil mist, dust, etc.
- **Elevation**: below 1000m.
- **Vibration**: less than 0.5G (4.9m/s2), 10 to 60 Hz (non-continuous operation).
- Protection class: IP 54

3.2.2 Installation method

- **Installation direction:** To avoid water and oil flowing from the outlet end of the motor into the motor, please place the cable outlet below. If the motor shaft is mounted upward and a reducer is attached, oil stains in the reducer shall be prevented from seeping into the motor from the motor shaft.
- **Concentric:** When connecting to a machine, use a coupling and keep the axis of the servo motor in line with the shaft of the machine.
- **Cable:** Do not bend the cable or load "tension" on it, so do not over-tighten the cable during wiring (using).
- **Fixing:** The motor must be installed securely and should be secured against loosening.

Chapter 4 Wiring

Warning

- This series of drivers is powered by three-phase 220V. When wiring, and it shall find out the power supply used by driver during wiring.
- Users must consider safety precautions during design and assembly when using this product to prevent accidents caused by incorrect operation.
- The driver terminals U, V, W must correspond to the motors U, V, W.
- The driver and motor must be well grounded.
- Power must be removed for more than 5 minutes before disassembling the drive.
- Do not turn the power on/off frequently. If the voltage must be turned on/off repeatedly, control it 1 time or less per minute.
- When using the internal braking resistor, the short-circuit wire must be connected between the B2 and B3 terminals. Do not connect the lead piece directly between B1 and B2.

4.1 Terminal Descriptions

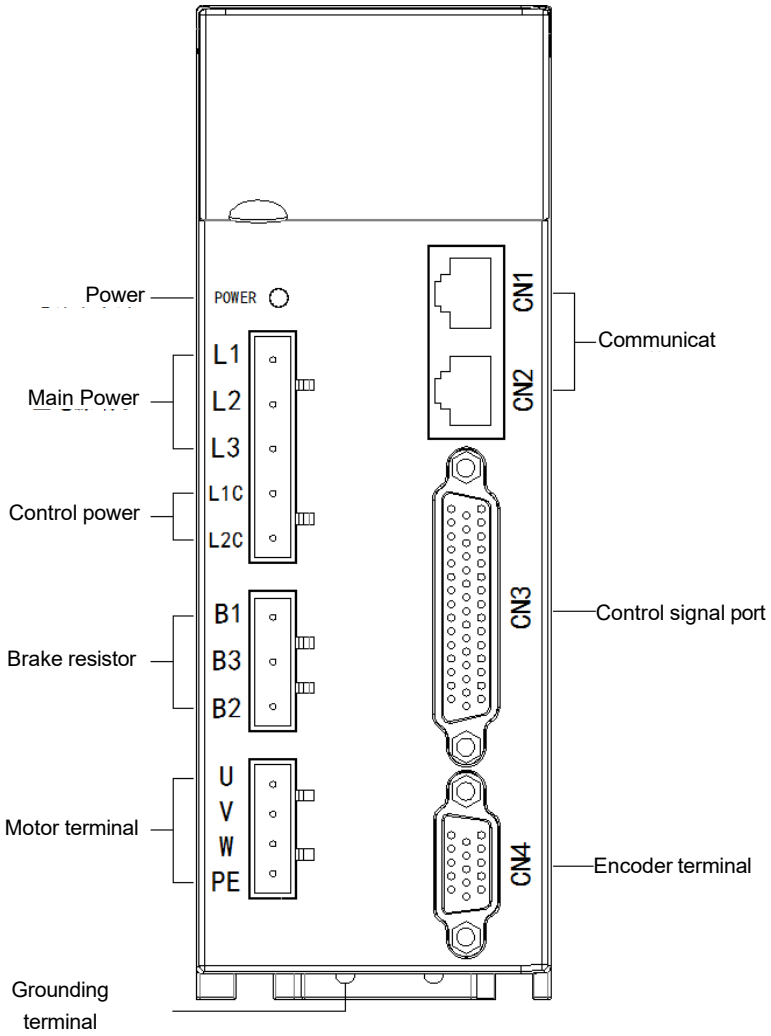

4.2 Main circuit wiring

4.2.1 Definition of main circuit terminal

◆ **Input power terminal**

No.	Signal definition	Feature
1	L1	Main circuit power supply, and it can be connected to three-phase 220V or single-phase 220V
2	L2	
3	L3	
4	L1C	Control power supply 220V AC input L1C
5	L2C	Control power supply 220V AC input L2C

◆ **Brake resistor terminal**

Pin	Signal definition	Feature	Descriptions
1	B1	DC bus positive terminal output DCP	The built-in resistor is terminated with B1 at positive end. If use built-in resistor to form B2 and B3 short circuit. If use external resistor, please connect the resistor between B1 and B2 (B2 and B3 must be disconnected).
2	B3	Built-in brake resistor negative output.	
3	B2	Brake triode collector output	

◆ **Motor terminal**

No.	Signal definition	Feature
1	U	Connected to the motor U phase
2	V	Connected to the motor V phase
3	W	Connected to the motor W phase
4	PE	Connected to the motor housing

4.2.2 Using method for main circuit power terminal (spring type)

1. Strip the wire sheath to expose 8~9mm bare copper wire.
2. The line pressing method is as follows:
   - Use the control lever of the servo drive to open the slot (as shown in Figure A);
   - Insert a straight screwdriver into the terminal opening (end width 3.0 to 3.5 mm), and press it firmly to open the slot (as shown in Figure B).
3. The line pressing method is as follows:

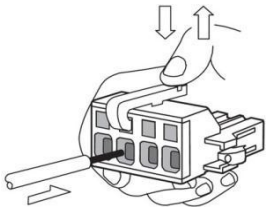

Figure a

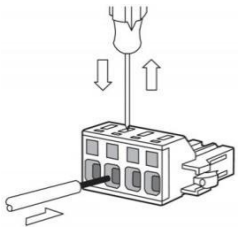

Figure b

4.2.3 Main circuit wiring

1. Single-phase power supply wiring:

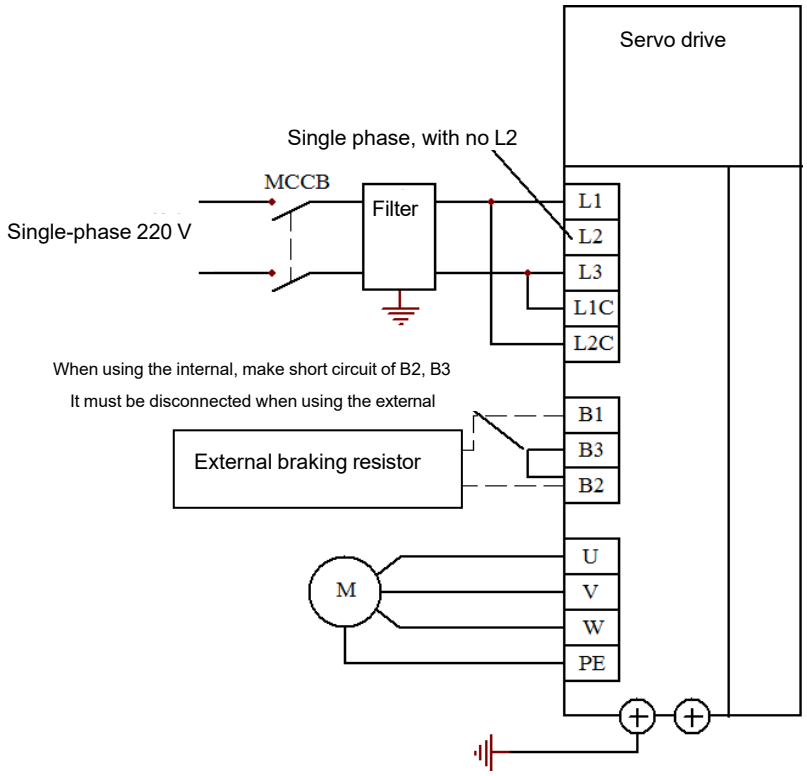

2. Three-phase power supply wiring:

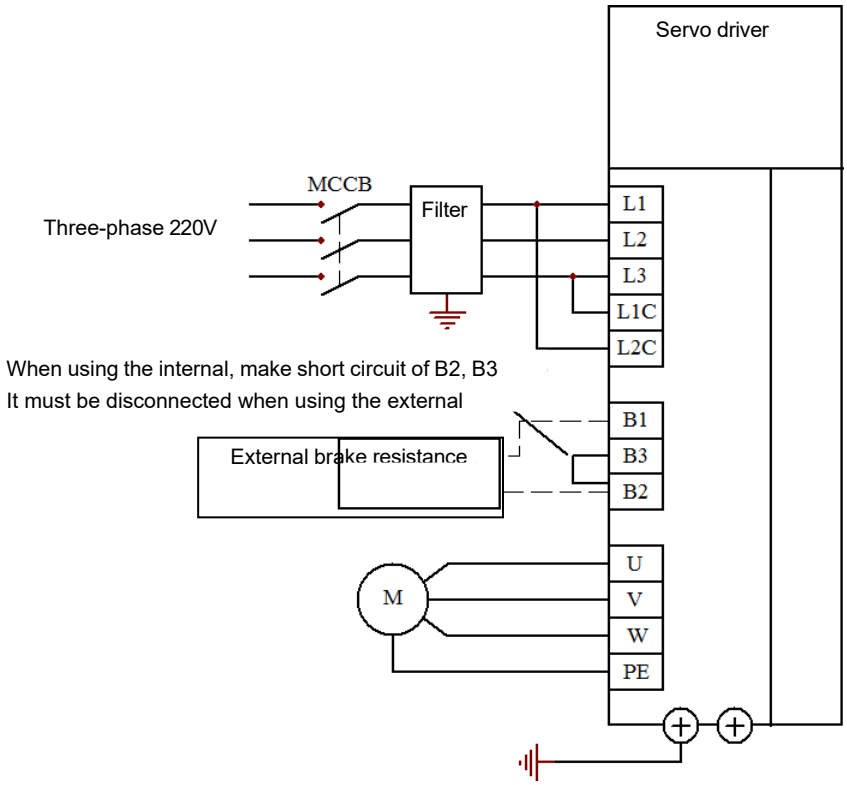

Note: When using the internal braking resistor, make short circuit of B2 and B3 (it has been factory connected); when using the external braking resistor, disconnect B2 and B3, and connect external braking resistor between B1 and B2.

4.2 Definition of wiring terminal

4.3.1 Definition of communication terminal（CN1/CN2）

Pin	Cable color	Signal definition
1	White/orange	CAN+
2	Orange	CAN-
3	White green	GND
4	Blue	485+
5	White/blue	485-
6	Green	NC
7	White/brown	NC
8	Brown	NC

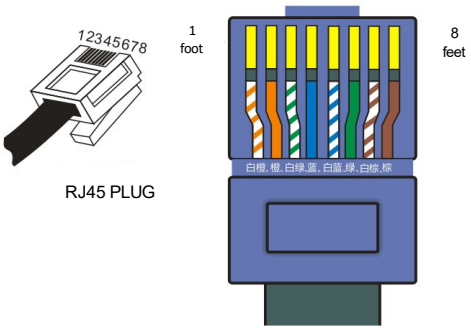

Crystal Head Pin Sequence

4.3.2 Definition of Control Terminal (NC3)

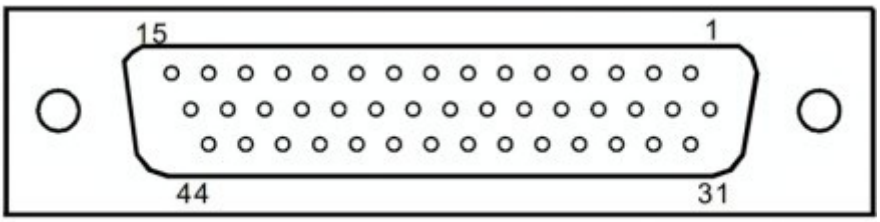

Welding surface of terminal

Pin	Signal description	Function Name	Precautions or supplementary notes
1	PUL-	Pulse input PUL negative terminal. 5V interface.	When the 5V pulse interface is connected to a 12V or 24V pulse, an external resistor must be connected in series; When using the 24V pulse input common port, the 24V collector pulse signal can be directly connected.
2	PUL+	Pulse input PUL positive terminal. 5V interface.	
16	DIR-	Pulse direction DIR negative terminal. 5V interface.	
17	DIR+	Pulse direction DIR positive terminal. 5V interface.	
35	OPC	24V pulse input common terminal	
3	DI0	Digital input 0.	For detailed description of the parameter configuration, see page 13 Chapter 4.5.1.
4	DI1	Digital Input 1	
5	DI2	Digital input 2.	
6	DI3	Digital input 3.	
18	DI4	Digital input 4.	
19	DI5	Digital input 5.	
20	DI6	Digital input 6.	
21	DI7	Digital input 7.	
36	COM+	DI port external power input positive terminal	It shall be connected to external +24V
37	COM-	DI/DO port external power input negative terminal	It shall be connected to external 0V
7	DO0	Digital input 0	For detailed description of the parameter configuration, see page 16 Chapter 4.5.3.
8	DO1	Digital input 1	
22	DO2	Digital input 2	
23	DO3	Digital input 3	
38	DO4	Digital input 4	
39	DO5-	Digital input 5-	
40	DO5+	Digital input 5-	
9	A+	Encoder frequency dividing output A+	Related configuration parameters: PA_044: feedback pulse doubling molecule PA_045: feedback pulse division octave denominator PA_046: Feedback pulse logic inversion **Note：When using a 17-bit motor, there is no feedback output signal.**
10	A-	Encoder frequency dividing output A-	
11	B+	Encoder frequency dividing output B+	
12	B-	Encoder frequency dividing output B-	
13	Z+	Encoder frequency dividing output Z+	
14	Z-	Encoder frequency dividing output Z-	

15	CZ	Z signal set electrode output end	Z signal set electrode output **Note：When using a 17-bit motor, there is no feedback output signal.**
24	GND	Feedback pulse output power ground	
41	AGND	Analog Input AGND	An external analog input that can be used as a speed or torque input signal.
42	AI1	Analog input AI1	
43	AGND	Analog Input AGND	External analog input can only be taken as a torque limit input signal.
44	AI2	Analog input AI2	
31	CANR1	CANOPEN Bus end resistance short jumper	Short the last servo of CANOPEN bus
32	CANR1		
33	485R2	485 bus end resistor short jumper	Make short circuit of the last servo of the 485 bus
34	485R2		

4.3.3 Definition of Encoder Terminal (NC4)

◆ Interface Schematic

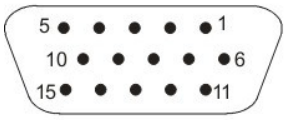

Servo side DB15 connector

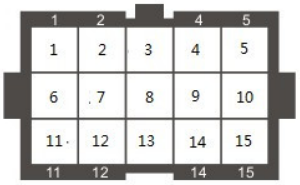

Small inertia motor ampere connector

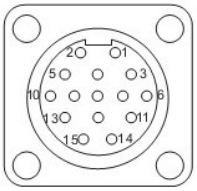

Medium inertia motor aviation plug

◆ Incremental encoder pin definition

Servo side DB15 pin		Motor side aviation plug pin		Name	Wire color selection
1	B+	5	B+	Encoder signal B+	Orange black
2	Z+	6	Z+	Encoder signal Z+	Yellow black
3	U+	10	U+	Hall signal U+	Br/B
4	V+	11	V+	Hall signal V+	Green and black
5	GNDD	3	GNDD	Encoder power ground	Black
6	A-	7	A-	Encoder signal A-	White
7	B-	8	B-	Encoder signal B-	Orange
8	Z-	9	Z-	Encoder signal Z-	Yellow
9	U-	13	U-	Hall signal U-	Brown
10	V-	14	V-	Hall signal V+	Green
11	VCC	2	VCC	Encoder power +5V	Red
12	A+	4	A+	Encoder signal A+	W/B
13	Casings	1	Casings	Shield ground	Shield ground
14	W+	12	W+	Hall signal W+	Gr/B
15	W-	15	W-	Hall signal W-	Grey

◆ 17-bit incremental/absolute encoder pin definition

Servo side DB15 pin		Name	Wire color selection
2	SD+	Encoder signal +	Yellow black
5	GND	Encoder power ground	Black
8	SD-	Encoder signal -	Yellow
11	VCC	Encoder power supply +5V	Red
Connect the battery box	E+	Absolute value battery line+	brown
	E-	Absolute value battery line-	Brown black / White

4.4 Wiring principle of control signal terminal

4.4.1 DI Input Circuit

◆ NPN type input

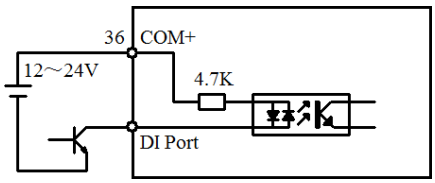

◆ PNP type input

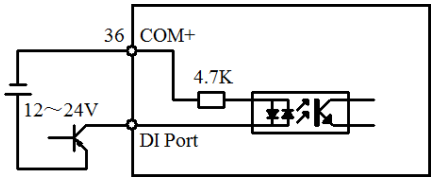

◆ Relay or switch input

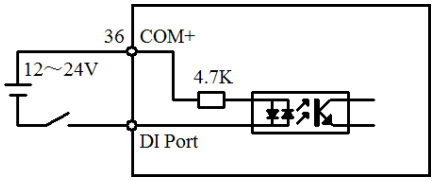

4.4.2 High-speed pulse input circuit

◆ Differential pulse signal

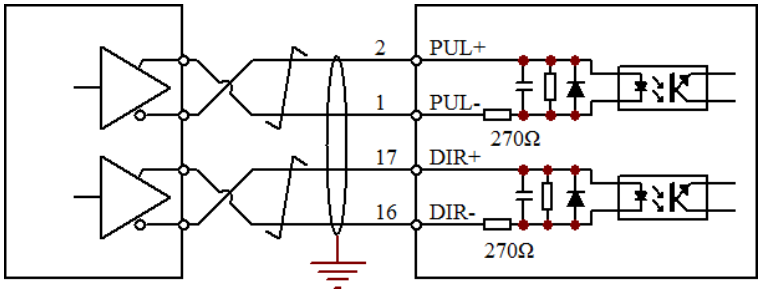

◆ NPN pulse signal (external resistor)

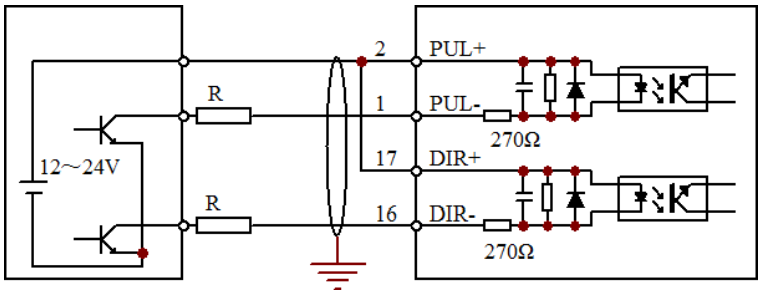

◆ PNP pulse signal (external resistor)

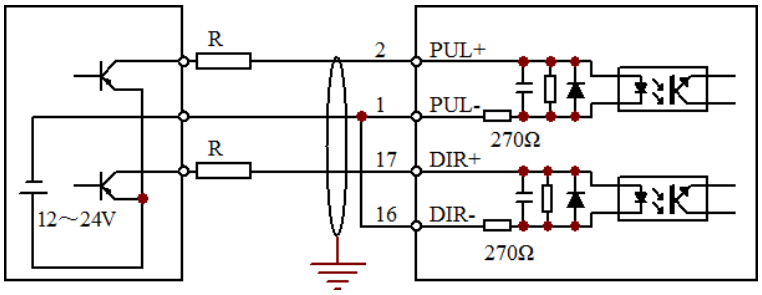

◆ 24V NPN pulse signal (built-in resistor)

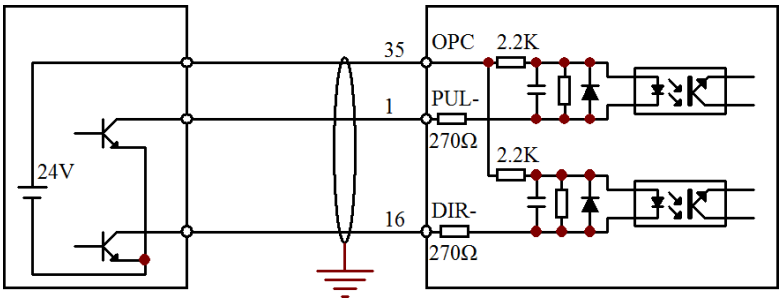

Note: When making wiring with external resistor, if the external signal voltage is 24V, R=1.5K; if the external signal voltage is 12V, R=1K.

4.4.3 DO output circuit

◆ DO~DO4 output circuit (common output negative terminal)

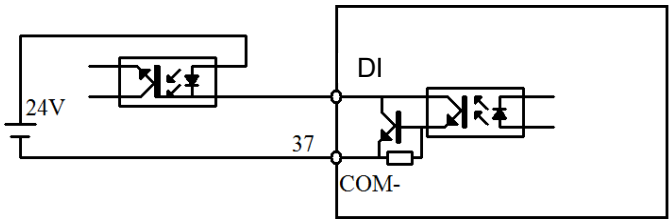

Optocoupler output

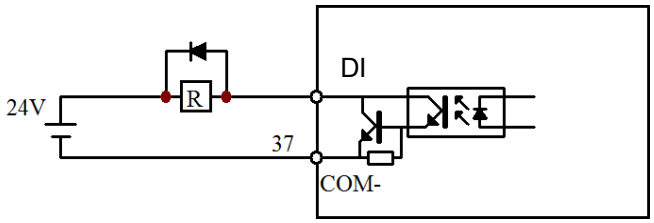

Relay output

◆ DO5 output circuit (Independent positive and negative output terminal)

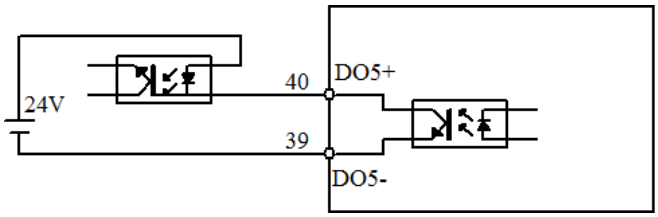

Optocoupler low level output

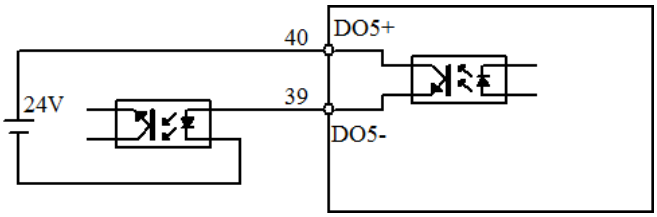

Optocoupler high level output

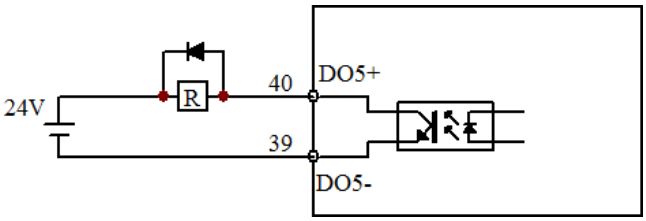

Relay Driver Outputs (100mA)

4.4.4 Analog Input Circuit

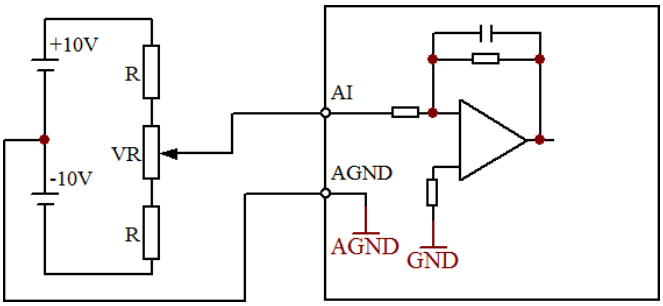

4.4.5 Pulse Feedback Output Circuit

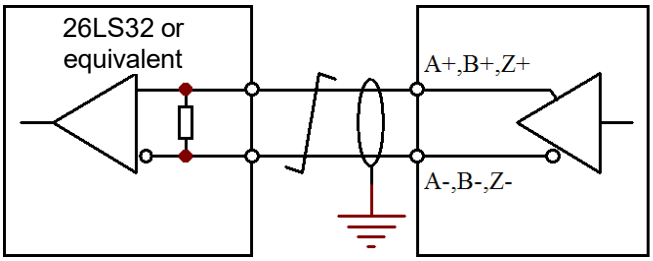

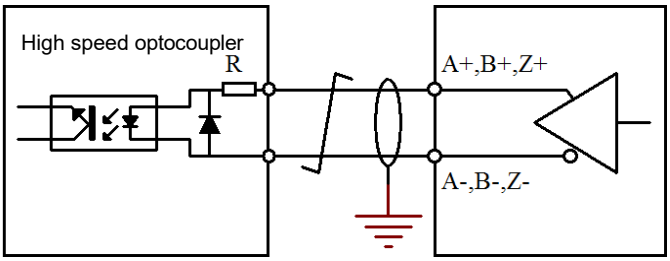

Note：When using a 17-bit motor, there is no feedback output signal.

4.5 DI/DO port function configuration details

4.5.1 DI Command Description

1. Each digital input DI can be configured as any servo command.
2. Relevant Parameters:

Parameter number	Parameter Functionality	Mode	Range	initial value	Description of parameters
PA_080	DIO configuration	P/S/T	0~22	0	Servo enabling (It can change the function by modifying the parameter value)
PA_081	DI1 configuration	P/S/T	0~22	1	Alarm clearing (It can change the function by modifying the parameter value)
PA_082	DI2 configuration	P/S/T	0~22	2	Clockwise stroke limit (change function by modifying parameter values)
PA_083	DI3 configuration	P/S/T	0~22	3	Counterclockwise travel limit (It can change the function by modifying the parameter value)
PA_084	DI4 configuration	P/S/T	0~22	10	Deviation counter clearing to 0 (It can change the function by modifying the parameter value)
PA_085	DI 5 Configuration	P/S/T	0~22	8	Command pulse prohibition (It can change the function by modifying the parameter value)
PA_086	DI6 configuration	P/S/T	0~22	15	Torque limit switching (It can change the function by modifying the parameter value)
PA_087	DI7 configuration	P/S/T	0~22	16	Back to zero start position (It can change the function by modifying the parameter value)
PA_08E	IO polarity configuration	P/S/T		0	The lower 8 bits correspond to the polarity configuration of the DI input port. Bit0 corresponds to DI0. The higher 8 bits correspond to the polarity configuration of the DI output port. Bit8 corresponds to DO0

3.DI servo command table

Command number (Set value of DI configuration parameter)	Command symbol	Command Name	Applicable control mode	Function or notes
0	SRV-ON	Servo enabling	P/S/T	1. When the command is valid, the servo enters the enable state (i.e. the motor is energized) 2. When the command is invalid, the servo cannot be enabled; i.e., the motor is not powered. Notice: 3. After the command is valid, the pulse can be input after at least 100mS. 4. Do not use this command to start or stop the motor
1	A-CLR	Alarm release	P/S/T	1. When the command continues to be valid for 120ms, the alarm status can be cleared.

<table>
<tr><td></td><td></td><td></td><td></td><td>2. When the alarm is cleared, the deviation counter will also be cleared.
Notice:
3. Some alarm states cannot be cleared by this command. Such as over-current alarm</td></tr>
<tr><td>2</td><td>CWL</td><td>Clockwise stroke limit</td><td>P/S/T</td><td>This command indicates the stroke limit signal in the CW (clockwise) direction. When the moving part exceeds the stroke limit switch in the CW direction, the signal is valid, so that the torque in the CW direction will no longer be generated.
PA_004 can set whether the command is valid
PA_066 can set the action when this command is valid.</td></tr>
<tr><td>3</td><td>CCWL</td><td>Anticlockwise stroke limit</td><td>P/S/T</td><td>This command indicates the stroke limit signal in the CCW (Counterclockwise) direction. The function is the same as CWL, refer to CWL.</td></tr>
<tr><td>4</td><td>C-MODE</td><td>Control mode switching</td><td>P/S/T</td><td>If the parameter PA_002 (control mode parameter) is set to 3 to 5, the control mode is selected as follows:
<table>
<tr><th>PA_002 Value</th><th>C-MODE Invalid</th><th>C-MODE Valid</th></tr>
<tr><td>3</td><td>Position control</td><td>Speed Control</td></tr>
<tr><td>4</td><td>Position control</td><td>Torque control</td></tr>
<tr><td>5</td><td>Speed Control</td><td>Torque control</td></tr>
</table>
Note: When the C-Mode switching mode is used, the motor may run sharply due to different commands in the corresponding control mode.</td></tr>
<tr><td>5</td><td>ZEROSPD</td><td>Zero speed clamp</td><td>S/T</td><td>When the signal is valid, the servo speed is forced to 0 rpm.
PA_006 can set whether the command is valid.</td></tr>
<tr><td>6</td><td>DIV</td><td>Command pulse frequency selection</td><td>P</td><td>Valid in position control mode. When the DIV is valid, the electronic gear ratio numerator selects the second command pulse frequency dividing molecule PA_049; and when the DIV is invalid, the first command pulse frequency dividing molecule PA_048 is selected.</td></tr>
<tr><td>7</td><td>SPD_DIR</td><td>Speed command direction</td><td>S</td><td>Valid in speed control mode. Indicates the direction of the analog speed command. This command is valid by setting PA_006.</td></tr>
<tr><td>8</td><td>INH</td><td>Command pulse prohibition</td><td>P</td><td>When this command is active, the input of the position pulse command is shielded.
PA_043 (instruction pulse forbids invalid setting) can set whether this command is valid.</td></tr>
</table>

<table>
<tr><td>9</td><td>GAIN</td><td>Gain switching</td><td>P/S</td><td>
<table>
<tr><th>PA_031
PA_032</th><th>PA_030</th><th>GAIN</th><th>Feature</th></tr>
<tr><td rowspan="2">/</td><td>0</td><td>0</td><td>Speed loop PI control</td></tr>
<tr><td>0</td><td>1</td><td>Speed loop PI control</td></tr>
<tr><td rowspan="2">PA_031＝2
PA_032＝2</td><td rowspan="2">1</td><td>0</td><td>Select the first gain</td></tr>
<tr><td>1</td><td>Select the second gain</td></tr>
<tr><td>PA_031≠2
PA_032≠2</td><td>1</td><td colspan="2">VOID</td></tr>
</table>
</td></tr>
<tr><td>10</td><td>CL</td><td>Clear the deviation counter to 0</td><td>P/S/T</td><td>It can be used to clear the contents of the deviation counter to 0.
Use PA_04E (counter clearing 0 mode parameter) to set:
0: The position deviation counter can be cleared to 0 by level (CL and COM - at least 100uS short circuit).
1: Make clearing with a rising edge (open circuit -> short circuit at least 100uS).
2: This function is invalid, so block this function</td></tr>
<tr><td>11</td><td>INTSPD1</td><td>Internal command selection 1</td><td>P/S/T</td><td rowspan="4">When the servo command is given as a multi-segment internal command, the sequence number selected by the command is determined by the binary value consisting of INTSPD1~INTSPD4, as shown in the following table:
<table>
<tr><th>INTSPD4</th><th>INTSPD3</th><th>INTSPD2</th><th>INTSPD1</th><th>Command No.</th></tr>
<tr><td>0</td><td>0</td><td>0</td><td>0</td><td>0</td></tr>
<tr><td>0</td><td>0</td><td>0</td><td>1</td><td>1</td></tr>
<tr><td>…</td><td>…</td><td>…</td><td>…</td><td>…</td></tr>
<tr><td>1</td><td>0</td><td>0</td><td>0</td><td>8</td></tr>
</table></td></tr>
<tr><td>12</td><td>INTSPD2</td><td>Internal command selection 2</td><td>P/S/T</td></tr>
<tr><td>13</td><td>INTSPD4</td><td>Internal command selection 4</td><td>P/S/T</td></tr>
<tr><td>14</td><td>INTSPD3</td><td>Internal command selection 3</td><td>P/S/T</td></tr>
<tr><td>15</td><td>TL-SEL</td><td>Torque limit switchover</td><td>P/S/T</td><td>This command allows you to select different torque limit values.
You can set this command to be valid by PA_003 parameter.
<table>
<tr><th>PA_003</th><th>CCW (counterclockwise)</th><th>CW (clockwise)</th></tr>
<tr><td>1</td><td colspan="2">CCW and CW direction limit value is set by PA_05E</td></tr>
<tr><td>2</td><td>Set by PA_05E</td><td>Set by PA_05F</td></tr>
<tr><td>3</td><td colspan="2">TL-SEL signal is invalid, set by PA_05E
TL-SEL signal is valid, set by PA_05F</td></tr>
</table></td></tr>
<tr><td>16</td><td>Homing</td><td>Start position of "back to zero"</td><td>P</td><td>The rising edge of the command initiates the mechanical zero return action.
Related parameter reference of "back to zero": PA_0A0～PA_0A6</td></tr>
</table>

17	ORG_SW	Origin switch position	P	This command signal is useful when the servo is zeroed. The command signal is valid, indicating that the machine has reached the origin switch.
18	POS_LOCK	Servo locking	P	This command is valid. The servo force forces the motor to the position corresponding to the valid command, and the given command is ignored.
19	JOG_BIT	JOG starting position	P/S/T	If the command is valid, the servo starts JOG action.
20	POS_LOAD	Position loading signal	P	When the command is valid, the new position command will be reloaded. Corresponding parameters: PA_096 multi-segment position loading mode setting parameter
21	EMG	Emergency stop or external error input	P/S/T	If the command is valid, the servo stops immediately. This signal has a higher priority than the servo enabling. That is, SERV-ON is valid, but EMG is also effective, then the motor is not powered.

4.5.2 DI port control mode

1. External DI port control

The DI can be controlled by wiring according to the wiring diagram in Chapter 5.

2. Communication control DI port

Setting the bit corresponding to PA_1A0 can determine whether the corresponding DI port is controlled by external wiring or communication parameter PA_1A4.

PA_1A5 can mask the status change of the corresponding bit of the PA1A4 parameter, as shown in the following example:

Parameter number	**Parameter Functionality**	**Parameter value binary bit status**							
		DI7	**DI6**	**DI5**	**DI4**	**DI3**	**DI2**	**DI1**	**DI0**
PA_1A0	External IO/Analog IO Switching	0	**1**	0	**1**	0	0	**1**	0
	When the corresponding bit is set to 0, the corresponding DI port is controlled by external wiring; When it is set to 1, the corresponding DI port is controlled by analog IO, with the control parameter of **PA_1A4**.	External control	COMMUNI-CATION CONTROL	External control	COMMUNI-CATION CONTROL	External control	External control	COMMUNI-CATION CONTROL	External control
PA_1A5	Communication analog IO masking	0	0	0	0	0	0	**1**	0
	When the corresponding bit of							**Mask**	

	this parameter is set to 1, the status of the corresponding bit of **PA_1A4** can be masked.								
PA_1A4	Communication simulation IO	0	**0**	0	**1**	0	**1**	**1**	0
	When the corresponding bit of **PA_1A0** is set to 1, this parameter can modify the status of the corresponding DI port. When it is set to 1, it indicates that the DI port is valid.	External control	**DI OFF**	External control	**DI On**	External control	**External control**	**DI OFF**	External control

4.5.3 DO Command Description

1. Each digital output DO can be configured to indicate any servo output status (serial number). Relevant parameters:

Parameter number (hexadecimal)	Parameter name	related Mode	Setting Range	Defaults	Function and meaning
PA_088	DO0 indication configuration	P/S/T	0～17	0	Servo ready
PA_089	DO1 indication configuration	P/S/T	0～17	1	Servo alarm
PA_08A	DO2 indication configuration	P/S/T	0～17	2	Location arrival
PA_08B	DO3 indication configuration	P/S/T	0～17	3	Brake Release
PA_08C	DO4 indication configuration	P/S/T	0～17	4	Zero speed detection
PA_08D	DO5 indication configuration	P/S/T	0～17	5	Torque limit arrival

2. Table of DO port function configuration

State no. (DO configuration value)	Status symbols	State Name	Function or meaning
0	S-RDY	Servo ready	1: The servo is ready, as long as it is enabled, it can be powered 0: The servo has an alarm or the main power is not powered on.
1	ALM	Servo alarm	1: Servo has an alarm 0: Servo has no alarm
2	COIN	Location arrival	1: Positioning completed 0: The location has not been arrived
3	BRK-OFF	Brake Release	1: The brake is released, the brake is released, and the motor shaft can be freely loosened. 0: The brake release is invalid; the motor is tight and cannot be rotated.
4	ZSP	Zero speed	1: Servo speed is close to zero speed (< PA_061 setting value)

		detection	0: Servo speed is not 0 (>PA_061 setting value).
5	TLC	Torque limiting	1: The actual torque is greater than the setting limiting torque value. 0: The actual torque is less than the setting limited torque value.
6	V-COIN	Speed consistency	1: The actual speed differs lightly from the given speed value, that is, the speed deviation is small. 0: The actual speed differs greatly from the given speed value, that is, the speed deviation is very large.
7	AT-SPEED	Speed arrival	1: Actual speed absolute value > Specified speed PA_062 0: Actual speed absolute value < Specified speed PA_062
9	OVERLOAD_O	OVERLOAD WARNING	1: Servo with overload alarm 0: Servo with no overload
10	BRAKE_ON	Brake pipe conduction state	1: Servo brake transistor conduction, and bus voltage is discharging through the resistor 0：Servo brake transistor closing.
11	ORG_FOUND	Origin has been found	during the servo mechanical back to zero 1: Means the origin has been found 0: Means the origin has not been found
14	BRAKE_ON_ERR_O	Brake error message	1: Too large servo braking force warning 0: No excessive braking rate of servo
15	EEPROM_STATE_O	EEPROm completion status	During the process of EEPROM reading and writing, 1: indicates EEPROM reading and writing have been completed 0: indicates EEPROM reading and writing have not been completed
16	JOG_RUN	JOG running position	1: indicates it is in trial operation 0: Not in the trial operation.
17	Homing_atived	Servo back to zero status	1: zero return action is running 0: Zero return action is not started

Chapter 5 Description of Control Mode

5.1 Position mode description

5.1.1 Position Mode Wiring Diagram

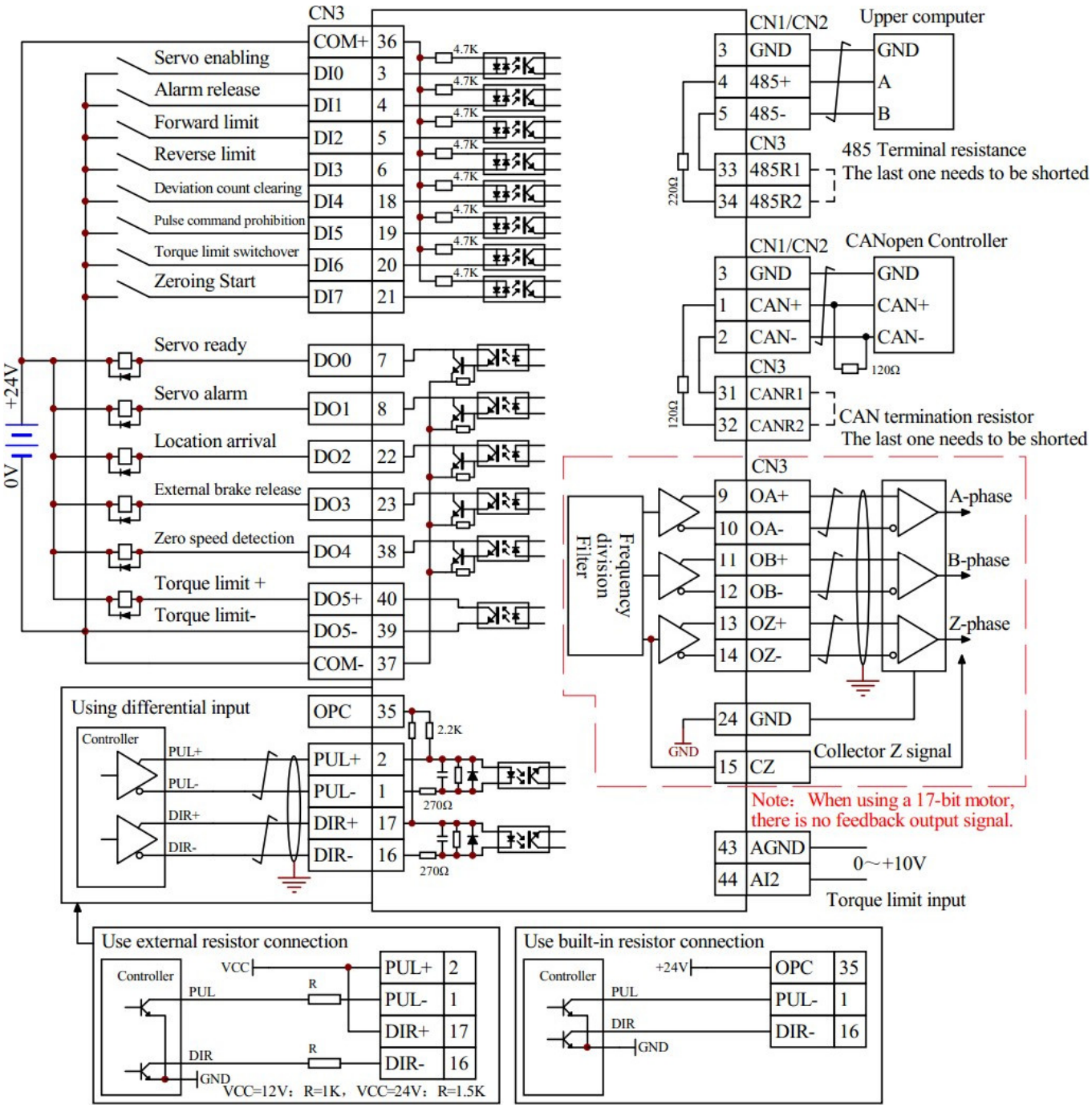

Note: When the servo is enabled, it can be controlled by the external DI port or powered on by PA_08F. The motor must be enabled before it can be controlled.

The DI port and DO port functions of this wiring diagram are not the default configuration of the servo, and the IO function parameters need to be modified.

5.1.2 Related Functions of External Position Mode

1. Pulse pin

Signal description	Corresponding CN3 pin number	Name	Notes or supplementary notes
PUL+	2	Pulse input positive.	1.2K current limiting resistor must be connected when connecting 24V pulse 2.Related parameters, PA_041, PA_042
PUL-	1	Pulse input negative.	
DIR+	17	Positive pulse direction	1.2K current limiting resistor must be connected when connecting 24V pulse 2. Related parameters, PA_041, PA_042
DIR-	16	Pulse direction negative.	
OPC	35	24V pulse common terminal	When the 24V pulse is input, the built-in resistor can be used through this terminal.

2. Related parameters

Parameter number	Parameter name	Setting range	Feature
PA_002	Control mode selection	0～5	When it is set to 0, it is the position mode
PA_041	Command pulse direction	0～1	Set the direction of the input pulse command
PA_042	Command pulse input form	0～3	Set the type of input pulse command 0 or 2: AB orthogonal pulse 1: CW + CCW pulse 3: pulse + direction
PA_04A	Number of pulses per motor	0～32767	Set the number of pulses per revolution of the motor directly. When this parameter is 0, the gear ratio will take effect.
PA_048	Electronic gear ratio molecule 1	1～10000	When the parameter PA_04A is set to 0, the electronic gear ratio can take effect. The electronic gear ratio molecule 1 is default to be effective. Number of pulses per revolution = (numerator of electronic gear ratio multiplied by pulse number of code wheel) / numerator of electronic gear ratio 2500 line encoder: code disc pulse = 10000 17-bit encoder: Code wheel pulse = 131072
PA_049	Electronic gear ratio molecule 2	1～10000	
PA_04B	Electronic gear ratio denominator	1～10000	
PA_04C	Position smoothing filter	0～7	Set position command smoothing filter 0: The filter is not effective; 1~7: The filter is valid. The larger the value, the higher the position command delay.
PA_045	Feedback pulse division factor	0～32767	0: number of feedback pulses per revolution = encoder resolution × 4 When it is not 0: $\frac{\quad}{\quad}$

PA_046	Feedback pulse logic inversion	0～7	Bit0: Set the logic level of the feedback pulse B signal Bit1: Set the logic level of the feedback pulse Z signal Bit2: Feedback pulse output content selection
PA_08F	Servo enable mode configuration	0～1	0: External command or communication command enabling 1: Power-on automatic enabling

3. DI/DO port function configuration

See section 4.5 of DI/DO command details.

5.1.3 Position mode communication control

1. DI port function configuration

Parameter number	Parameter name	Set point	Feature
PA_080	DI0 function configuration	0	Servo enabling
PA_081	DI1 function configuration	1	Alarm release
PA_082	DI2 function configuration	2	Clockwise stroke limit
PA_083	DI3 function configuration	3	Anticlockwise stroke limit
PA_084	DI4 function configuration	21	Emergency stop
PA_085	DI5 function configuration	20	Position loading signal
PA_086	DI6 function configuration	17	Origin switch
PA_087	DI7 function configuration	16	Start of "back to zero"

2. Related pin wiring

Signal description	Corresponding CN3 pin number	Name	Notes or supplementary notes
CWL	5	Clockwise stroke limit	DI port function should be configured first
CCWL	6	Anticlockwise stroke limit	DI port function should be configured first
ORG_SW	20	Origin switch	DI port function should be configured first

3. Related parameters

Parameter number	Parameter name	Setting range	Feature
PA_002	Control mode selection	0～5	When it is set to 0, it is the position mode
PA_090	Work mode settings	0～1	0: External control 1: Extended control (It is set to 1 when using communication control)
PA_091	Communication location mode index	0～15	When the DI port is configured with the NTSPD1~INTSPD4 function, the external DI port is required to switch the position segment

<table>
<tr><td></td><td></td><td></td><td>to be loaded;
When the DI port is not configured with the INTSPD1~INTSPD4 function, this parameter can be used to select the position segment to be loaded.
Example: When it is set to 2, the internal position of the second segment is loaded. When the load signal is triggered, the motor rotates according to the internal position of the second segment.</td></tr>
<tr><td>PA_094</td><td>Absolute position or relative position setting</td><td>0～1</td><td rowspan="2"><table>
<tr><th>PA_096</th><th>PA_094</th><th>Functional description</th></tr>
<tr><td rowspan="2">0</td><td>0</td><td>Loading</td></tr>
<tr><td>1</td><td>Loading</td></tr>
<tr><td rowspan="2">1</td><td>0</td><td>High level loading</td></tr>
<tr><td>1</td><td>Not supported (load signal is invalid)</td></tr>
<tr><td rowspan="2">2</td><td>0</td><td>Rising edge loading</td></tr>
<tr><td>1</td><td>Rising edge loading</td></tr>
</table></td></tr>
<tr><td>PA_096</td><td>Multi-segment position loading mode</td><td>0～2</td></tr>
<tr><td>PA_0A0</td><td>Power-on zero returning setting</td><td>0～1</td><td>0: The Homing signal triggers zero returning.
1: Power-on automatic zero returning.</td></tr>
<tr><td>PA_0A1</td><td>Zero returning mode setting</td><td>0～1</td><td>Refer to the appendix for a description of the zero returning function.</td></tr>
<tr><td>PA_170</td><td>Internal position command 0</td><td>Any</td><td>The number of displacement pulses corresponding to the internal position 15.</td></tr>
<tr><td>…</td><td>…</td><td>…</td><td>…</td></tr>
<tr><td>PA_19F</td><td>Internal position command speed 15</td><td>0～3000</td><td>The speed corresponding to the internal position 15.</td></tr>
</table>

5.2 Speed mode description

5.2.1 Wiring diagram at speed mode

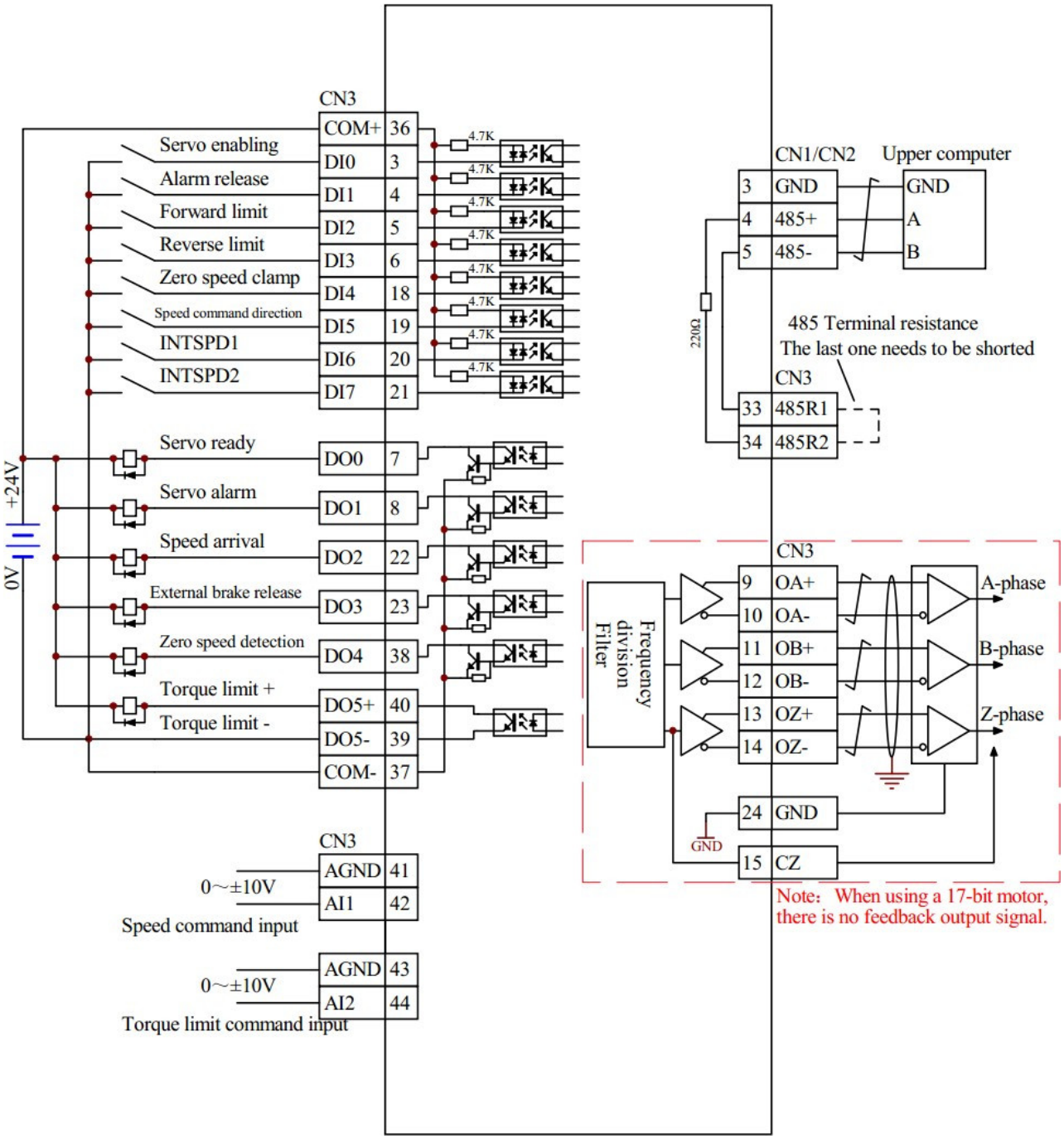

Note: When the servo is enabled, it can be controlled by the external DI port or powered on by PA_08F. The motor must be enabled before it can be controlled.

The DI port and DO port functions of this wiring diagram are not the default configuration of the servo, and the IO function parameters need to be modified.

5.2.2 Related functions of external speed mode

1. DI/DO port function configuration

Parameter number	Parameter name	Set point	Feature
PA_080	DI0 function configuration	0	Servo enabling
PA_081	DI1 function configuration	1	Alarm release
PA_082	DI2 function configuration	2	Clockwise stroke limit
PA_083	DI3 function configuration	3	Anticlockwise stroke limit
PA_084	DI4 function configuration	5	Zero speed clamp
PA_085	DI5 function configuration	7	Speed command direction
PA_086	DI6 function configuration	11	INTSPD1
PA_087	DI7 function configuration	12	INTSPD2
PA_088	DO0 function configuration	0	Servo ready
PA_089	DO1 indication configuration	1	Servo alarm
PA_08A	DO2 function configuration	7	Speed arrival
PA_08B	DO3 function configuration	3	External brake release
PA_08C	DO4 indication configuration	4	Zero speed detection
PA_08D	DO5 indication configuration	5	Torque limiting

2. Related pin wiring

Signal description	Corresponding CN3 pin number	Name	Notes or supplementary notes
AGND	41	Analog ground	A ±10 analog voltage can be input as a speed command.
AI1	42	Analog Input	

3. Related parameters

Parameter number	Parameter name	Setting range	Feature
PA_002	Control mode selection	0～5	When it is set to 1, it is the speed mode
PA_005	Internal/external speed selection	0～3	0: analog command input; 1: internal speed (internal speed 1 to 4); 2: internal speed (internal speed 1 to 3, analog command input); 3: Internal speed (internal speed 1 to 8). Note: Internal speed 1~4 corresponds to PA_053~PA_056; The internal speeds 5 to 8 correspond to PA_074 to PA_077.
PA_006	Zero speed clamp selection/speed command direction	0～2	0: Zero speed clamp signal is invalid; 1: Zero speed clamp signal is valid; 2: The speed command direction is valid (the DI port function needs to be configured). Note: Set to 2 in torque mode means that the zero-speed clamp signal is invalid.
PA_04F	Analog dead zone	0～1000	Unit: mV When the input voltage is less than the set voltage, the motor speed is zero.
PA_050	Speed command gain	10～2000	Set the proportional relationship between the input speed command and the motor speed; Set value =rotate speed of corresponding motor at 1V voltage input
PA_051	Logic negation of speed command	0～1	It is effective when PA_006≠2. When it is set to 1, the rotation is reversed.
PA_052	Speed/torque zero drift setting	-2047～+2047	Unit: mV It's used to adjust the zero drift of the input analog command.
PA_057	External analog filter	0～6400	Unit: 10uS, set analog command delay filter
PA_058	Acceleration time setting	0～2500	Set the speed mode acceleration time, unit: ms
PA_059	Deceleration time setting	0～2500	Set the speed mode deceleration time, unit: ms
PA_061	Zero speed detection threshold	10～20000	Set the detection threshold of the zero-speed detection signal (ZSP)
PA_062	The speed reaches the detection threshold	10～20000	Set the detection threshold of speed arrival signal (COIN)

4. Combination mode when using DI port to switch internal speed

DI port combination mode			Internal speed
INTSPD3	INTSPD2	INTSPD1	
0	0	0	PA_053
0	0	1	PA_054
0	1	0	PA_055
0	1	1	PA_056
1	0	0	PA_074
1	0	1	PA_075
1	1	0	PA_076
1	1	1	PA_077

5.2.3 Communication control switching internal speed

Parameter number	Parameter name	Setting range	Feature
PA_002	Control mode selection	0～5	When it is set to 1, it is the speed mode
PA_090	Work mode settings	0～1	0: External control 1: Extended control (It is set to 1 when using communication control)
PA_092	Index of communication speed mode	0～15	When the DI port is configured with the NTSPD1~INTSPD4 function, the external DI port is required to switch the multi-segment speed; When the DI port is not configured with the INTSPD1~INTSPD4 function, this parameter can be used to select the multi-segment speed. Example: When it is set to 2, the second internal speed is loaded.
PA_150	Internal speed 0	-3000～+3000	Internal speed of the 0th segment
…	…	…	…
PA16F	Internal speed 31	-3000～+3000	Internal speed of the 31st segment

5.3 Torque mode specification

5.3.1 Wiring diagram of torque mode

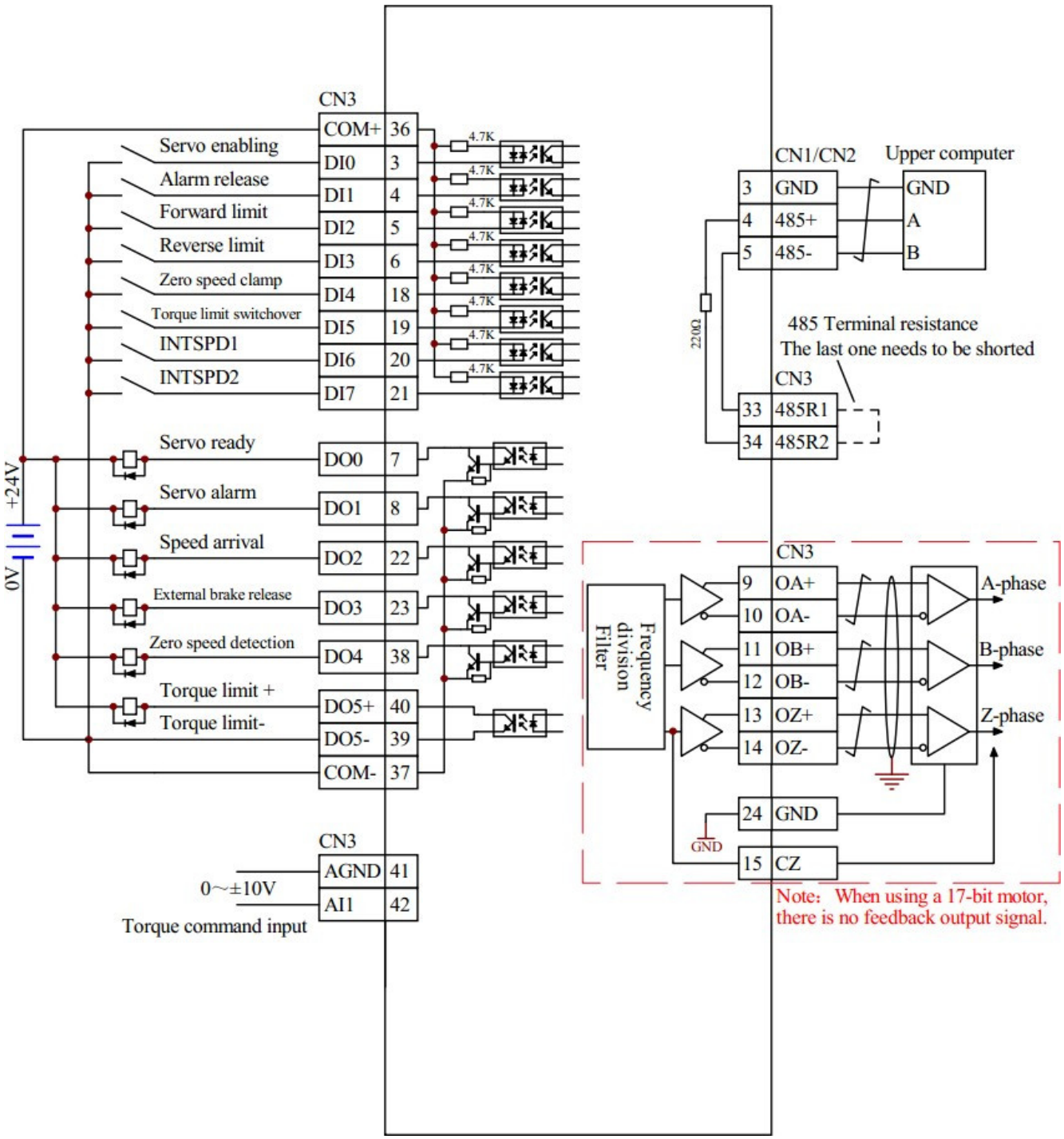

Note: When the servo is enabled, it can be controlled by the external DI port or powered on by PA_08F. The motor must be enabled before it can be controlled.

The DI port and DO port functions of this wiring diagram are not the default configuration of the servo, and the IO function parameters need to be modified.

Upper

5.3.2 Related functions of external torque mode

1. DI/DO port function configuration

Parameter number	Parameter name	Setpoint	Feature
PA_080	DI0 function configuration	0	Servo enabling
PA_081	DI1 function configuration	1	Alarm release
PA_082	DI2 function configuration	2	Clockwise stroke limit
PA_083	DI3 function configuration	3	Anticlockwise stroke limit
PA_084	DI4 function configuration	5	Zero speed clamp
PA_085	DI5 function configuration	15	Torque limit switchover
PA_086	DI6 function configuration	11	INTSPD1
PA_087	DI7 function configuration	12	INTSPD2
PA_088	DO0 function configuration	0	Servo ready
PA_089	DO1 indication configuration	1	Servo alarm
PA_08A	DO2 function configuration	7	Speed arrival
PA_08B	DO3 function configuration	3	External brake release
PA_08C	DO4 indication configuration	4	Zero speed detection
PA_08D	DO5 indication configuration	5	Torque limiting

2. Related pin wiring

Signal description	Corresponding CN3 pin number	Name	Notes or supplementary notes
AGND	41	Analog ground	A ±10 analog voltage can be input as a torque command input.
AI1	42	Analog input 1	
AGND	43	Analog ground	A ±10 analog voltage can be input as a torque limit input.
AI2	44	Analog input 2	

3. Related parameters

Parameter number	Parameter name	Setting range	Feature
PA_002	Control mode selection	0～5	When it is set to 2, it is the torque mode
PA_003	Torque limit selection	1～3	PA_003: CCW counterclockwise, CW clockwise 1: CCW and CW direction limit value are set by PA_05E 2: Set by PA_05E, Set by PA_05F 3: TL-SEL signal is not conductive, set by PA_05E; TL-SEL signal is conductive, set by PA_05F
PA_052	Speed/torque zero drift setting	-2047～+2047	It's used to adjust the zero drift of the input analog command.(Unit: mV)

PA_057	External analog filter	0～6400	Unit: 10uS, set analog command delay filter
PA_05C	Torque command gain	10～100	Set the proportional relationship between motor torque and external analog voltage (How many volts corresponds to 100% of rated torque) Unit: 0.1V/100%
PA_05D	Torque instruction logic inversion	0～1	Set the logic level of the analog torque command.
PA_05E	1st torque limit	0～3000	Set the 1st limit value of motor torque, unit: %
PA_05F	2nd torque limit	0～3000	Set the 2nd limit value of motor torque, unit: %

5.3.3 Communication Control Torque Mode

Parameter number	Parameter name	Setting range	Feature
PA_002	Control mode selection	0～5	When it is set to 2, it is the torque mode
PA_090	Work mode settings	0～1	0: External control 1: Extended control (It is set to 1 when using communication control)
PA_093	Communication torque mode index	0～15	When the DI port is configured with the NTSPD1~INTSPD4 function, the external DI port is required to switch the multi-segment torque; When the DI port is not configured with the INTSPD1~INTSPD4 function, this parameter can be used to select the multi-segment torque. Example: When it is set to 2, the second internal torque is loaded.
PA_12C	Internal torque 0	-3000～+3000	Internal torque of the 0th segment
…	…	…	…
PA_14B	Internal torque 31	-3000～+3000	Internal torque of the 31th segment

5.4 Gain parameter adjustment

The first set of gain parameters is default to be valid. Generally, only the first set of gains needs to be adjusted.

Parameter address	Parameter name	Correlation Mode	Setting Range	Defaults	Function and meaning
PA_010 [16]	First position loop gain	P	0～1000	20	Define the size of the position loop gain. The gain increase can improve the servo stiffness of position control But too high a gain can cause a vibration
PA_011 [17]	First speed loop gain	ALL	1～3500	30	Define the size of the speed loop gain. The gain increase can improve the response speed or bandwidth of the speed control. Too high gain will cause vibration, so make no vibration of motor while gain increase.
PA_012 [18]	First speed loop integral time constant	ALL	1～1000	50	The action decrease can speed up the integral action and eliminates static errors faster Unit: x 10uS
PA_013 [19]	First speed detection filter	ALL	0～5	1	Select the type of speed filter from 0 to 5. The higher the set value, the smaller the motor noise and the slower the response. The smaller the setting value, the faster the response. The value should be reduced if you want to increase the bandwidth.
PA_014 [20]	The first torque filter time constant	ALL	0～25000	3	Define the primary delay filter time constant after insertion into the torque command Unit: x 10uS The torque filter parameters setting can reduce the vibration of the machine.
PA_015 [21]	Rate feed-forward	P	-2000～+2000	500	It is used to set the rate feed-forward value Unit: 0.1% In the case of response height, the parameter setting can reduce the following deviation.
PA_016 [22]	Speed feedforward filter time constant	P	0～6400	50	Primary delay filter time constant for rate feedforward can be set Unit: x 10uS
PA_01D [29]	First trapped wave frequency selection	ALL	25～1500	1500	It is used to set the frequency of the first trapped wave filter that suppresses resonance. 1500: Trapped wave filter function is disabled
PA_01E [30]	First trapped wave width selection	ALL	0～8	100	It is used to set the width of the first trapped wave filter that suppresses resonance. 0: The narrowest width. 8: The maximum width.

PA_021 [33]	Mechanical rigidity selection enabling	ALL	0～1	0	The rigid table selection enabling configuration. 0: PA_022 parameter setting is invalid, and gain integral and other parameters will maintain the most recent value. If the parameter is appropriate, please save the EEPROM, otherwise the power-on gain parameter will be overwritten by the EEPROM value. 1: PA_022 parameter setting is valid, and the corresponding gain parameter can be configured according to the rigidity selection level. The first set of gain parameters will be covered by the corresponding values, and the covered parameters are PA_010, PA_011, PA_012, PA_013, PA_014, PA_015, PA_016. Note: Only the first set of gains will be affected and the second set of gains will not be covered. If the user wants to use 2 sets of gains, please adjust the parameters in a certain state, record the values; and the corresponding coverage should be converted and saved in the second set of gain parameters.
PA_022 [34]	Gain mechanical stiffness rating selection	ALL	0～31	3	The mechanical rigidity level can be selected, and the PA_021 good parameter must be set to 1 to be valid. The larger the parameter setting, the faster the response
PA_026 [38]	Control method selection	P/S/T	0～1	0	Choose different PID algorithms for different values. 0: Smart PID, suitable for fast response occasions 1: I-P control, suitable for occasions with strong rigidity requirements
PA_072 [114]	Overload level	ALL	0~ 3000	0	The overload level of the motor can be set. Unit: ‰ If you need a lower overload level, set this parameter in advance. 0: 1.05 times overload threshold, with overload time * 1 times 1:1.20 times overload threshold, with overload time *0.875 times 1:1.30 times overload threshold, with overload time *0.750 times 3: 1.05 times overload threshold, with overload time * 0.5 times 4：1.20 times overload threshold, with overload time * 1 times (for special occasions) 5：1.30 times overload threshold, with overload time * 1 times (for special occasions) 6：1.50 times overload threshold, with overload time * 0.875 times (for special occasions)

					7: 1.05 times overload threshold, with overload time * 1.125 times 8: 1.05 times overload threshold, with overload time * 1.250 times 9: 1.05 times overload threshold, with overload time * 1.375 times 10: 1.05 times overload threshold, with overload time * 1.50 times 11: 1.05 times overload threshold, with overload time * 1.625 times 12: 1.05 times overload threshold, with overload time * 1.75 times Other, overload threshold = (overload level/1000 times), overload time of 1 time
PA_07D [125]	Current loop gain				Current loop gain.
PA_07E [126]	Current loop integral time constant				Unit: 62.5uS

Chapter 6 Description of parameters

6.1 Description of basic parameters

Parameter address description: The parameter number is the hexadecimal communication address with the square brackets as the decimal communication address.

<table>
<tr><th>Parameter address</th><th>Parameter name</th><th>Correl-ation Mode</th><th>Setting Range</th><th>Defaults</th><th>Function and meaning</th></tr>
<tr><td>PA_000
[0]</td><td>Correspondence address</td><td>ALL</td><td>0～32</td><td>1</td><td>Communication slave address, CANOPEN and RS485 share this parameter</td></tr>
<tr><td>PA_001
[1]</td><td>LED initial state</td><td>ALL</td><td>0～17</td><td>0</td><td>Select the content displayed on the 7-segment digital tube when the control power is turned on.
0: total number of position deviation pulses
1: motor speed
2: Torque output load rate
3: Control mode
4: IO signal status
5: Alarm Code / History
6: Software version
7: System status (A4 is the alarm status)
8: Discharge resistance load rate
9: Overload rate
10: inertia ratio
11: total number of feedback pulses
12: total number of command pulses
13: Total number of pulses of external feedback device deviation
14: Total number of pulses of external feedback device
15: Motor automatic identification function
16: analog command input value
17: The reason why the motor does not turn</td></tr>
<tr><td>PA_002
[2]</td><td>Control mode selection</td><td>ALL</td><td>0～5</td><td>0</td><td>Select the control mode of the servo drive.
After the setting, it can be effective only after the control supply is powered on again
<table>
<tr><th>PA_002 Value</th><th>Control modes</th><th>pattern code</th></tr>
<tr><td>0</td><td>Location modes</td><td>P</td></tr>
<tr><td>1</td><td>Speed mode</td><td>S</td></tr>
<tr><td>2</td><td>Torque Pattern</td><td>T</td></tr>
<tr><td>3</td><td>Position/speed mode</td><td>P/S</td></tr>
<tr><td>4</td><td>Position/torque mode</td><td>P/T</td></tr>
<tr><td>5</td><td>Speed/torque mode</td><td>S/T</td></tr>
<tr><td>10</td><td>Canopen mode</td><td>P/S/T</td></tr>
<tr><td colspan="3">When it is set to the hybrid mode, the first mode or the second mode can be selected by the C_MODE (control mode switching) pin signal.
C_MODE is conducting, the second mode
C_MODE is not conducting, the first mode
Note: It takes 10ms to input the command when switching C_MODE signal.</td></tr>
</table></td></tr>
</table>

<table>
<tr><td>PA_003
[3]</td><td>Torque limit selection</td><td>P/S/T</td><td>1～3</td><td>1</td><td>Set the size and source of counterclockwise and clockwise torque limits
<table>
<tr><td>PA_003 Value</td><td>CCW (counterclockwise)</td><td>CW (clockwise)</td></tr>
<tr><td>0</td><td colspan="2">Ai_TL analog input absolute value, 3V corresponds to 100% of the quota torque.</td></tr>
<tr><td>1</td><td colspan="2">CCW and CW direction limit value are set by PA_05E</td></tr>
<tr><td>2</td><td>Set by PA_05E</td><td>Set by PA_05F</td></tr>
<tr><td>3</td><td colspan="2">TL-SEL signal is not conductive, set by PA_05E
TL-SEL signal is conductive, set by PA_05F</td></tr>
</table>
Note:
1. If PA_003 is 0, it is not supported.
2. Torque mode, torque limit is also effective (it can be set large so that it can make protection in case of abnormal user command).</td></tr>
<tr><td>PA_004
[4]</td><td>Travel limit setting</td><td>ALL</td><td>0～2</td><td>1</td><td>Set whether the two travel limit input signals are valid
0: In case of the stroke limit action, the action is started according to the timing set by PA_066;
1: The input of travel limit input signal is invalid;
2: In case of one disconnection for either the CCW limit signal or the CW limit signal, it will cause the stroke limit input signal error alarm.
Note 1: The control power supply shall be restarted for the effective parameter setting.
Note 2: The effective polarity of the stroke limit can be set by the polarity of DI, i.e. PA_092. By default, the optocoupler conduction is effective (this is the opposite of Panasonic, so most should be configured with the polarity of corresponding DI).</td></tr>
<tr><td>PA_005
[5]</td><td>Internal/external speed switching selection</td><td>S</td><td>0～3</td><td>0</td><td>Select the speed command type under speed mode
0: analog speed command input;
1: Internal command (1st to 4th internal speeds: setting values of PA_053 to PA_056)
2: Internal command (1st to 3rd internal speed command, analog command input)
3: Internal command (1st to 8th internal speeds: PA_053~PA_056 and PA_074~PA_077).
Note: Internal command, controlled by INTPPD1~INTSPD8 pin signals</td></tr>
<tr><td>PA_006
[6]</td><td>Zero-speed clamp selection</td><td>S/T</td><td>0～2</td><td>0</td><td>Select the function of the zero-speed clamp (ZEROSPD) signal.
0: Zero speed clamp signal is invalid;
1: Zero speed clamp is valid;
2: Speed command code, please configure DIx=7 (speed command direction or operate the bit7 of servo command for control), the corresponding command number is 7 instead of zero speed clamp (serial number 5)
Note: In torque mode, PA_006 = 2 means the zero-speed clamp is invalid.</td></tr>
<tr><td>PA_007
[7]</td><td>Command pulse signal digital filtering</td><td>All</td><td>1～15</td><td>2</td><td>The larger the number, the stronger the anti-interference ability, and the smaller of the frequency of the input signal.</td></tr>
</table>

PA_008 [8]	Encoder signal digital filtering	All	1～15	2	The larger the number, the stronger the anti-interference ability, and the smaller of the frequency of the input signal.
PA_00A [10]	First trapped wave depth	ALL	any	0～99	First trapped wave depth. 0: The center frequency has the maximum attenuation and the strongest filtering. 99: the center frequency has the smallest attenuation and the weakest filtering.
PA_00B [11]	Absolute value encoder Settings	ALL	0～2	1	Choose the usage of the absolute type encoder: 0: Used as absolute type encoder 1: Used as an incremental encoder 2: Used as an absolute type encoder, with regardless of counter overflow Note: This parameter will be valid after power restarting. (Absolute encoder 17 Bit is supported tentatively)
PA_00C [12]	Canopen baudrate setting	ALL	0~6	4	It is used to set the baud rate of Canopen 0：20Kbps 1：50K bps 2：125K bps 3：250Kbps 4：500K bps 5：750K bps 6：1M bps Note: This parameter will be valid after power restarting.
PA_00D [13]	485 baud rate setting	ALL	0～6	3	It is used to set the baud rate of RS485,parameter available when power restart. 0：2400bps 1：4800 bps 2：9600 bps 3： 19200 bps 4： 38400 bps 5： 57600 bps 6： 115200 bps Note: 8 data bits, 1 stop bit, parity is even parity (EVEN)
PA_00E [14]	Operation panel lock setting	ALL	0～1	0	The operation panel can be locked to the monitoring state to avoid misoperations, such as parameter modification. 0: No lock, all functions can be operated 1: It is locked to the monitor state. Even if this parameter is set to 1, the parameters can be modified by communication. Axis addresses can be displayed by pressing both the up and down keys simultaneously
PA_00F [15]	Manufacturer parameters		0～100	65	Pdff feedforward coefficient

PA_010 [16]	First position loop gain	P	0～1000	20	Define the size of the position loop gain. The gain increase can improve the servo stiffness of position control But too high a gain can cause a vibration
PA_011 [17]	First speed loop gain	ALL	1～3500	30	Define the size of the speed loop gain. The gain increase can improve the response speed or bandwidth of the speed control. Too high gain will cause vibration, so make no vibration of motor while gain increase.
PA_012 [18]	First speed loop integral time constant	ALL	1～1000	50	The action decrease can speed up the integral action and eliminates static errors faster Unit: x 10uS
PA_013 [19]	First speed detection filter	ALL	0～5	1	Select the type of speed filter from 0 to 5. The higher the set value, the smaller the motor noise and the slower the response. The smaller the setting value, the faster the response. The value should be reduced if you want to increase the bandwidth.
PA_014 [20]	The first torque filter time constant	ALL	0～ 25000	3	Define the primary delay filter time constant after insertion into the torque command Unit: x 10uS The torque filter parameters setting can reduce the vibration of the machine.
PA_015 [21]	Rate feed-forward	P	-2000 ～ +2000	500	It is used to set the rate feed-forward value Unit: 0.1% In the case of response height, the parameter setting can reduce the following deviation.
PA_016 [22]	Speed feedforward filter time constant	P	0～6400	50	Primary delay filter time constant for rate feedforward can be set Unit: x 10uS
PA_017 [23]	Acceleration feedforward	P/S	0～100	0	Acceleration feedforward coefficient
PA_018 [24]	The second position loop gain	P	0～3000	30	Define the size of the position loop gain. The gain increase can improve the servo stiffness of position control But too high a gain can cause a vibration
PA_019 [25]	The second speed loop gain	ALL	1～3500	40	Define the size of the speed loop gain. The gain increase can improve the response speed or bandwidth of the speed control. Too high gain will cause vibration, so make no vibration of motor while gain increase.
PA_01A [26]	The second speed loop integral time	ALL	1~1000	35	The action decrease can speed up the integral action and eliminates static errors faster Unit: x 10uS.

	constant				
PA_01B [27]	The second speed detection filter	ALL	0～5	0	Select the type of speed filter from 0 to 5. The higher the set value, the smaller the motor noise and the slower the response. The smaller the setting value, the faster the response. The value should be reduced if you want to increase the bandwidth.
PA_01C [28]	The second torque filter time constant	ALL	0～ 25000	3	Define the primary delay filter time constant after insertion into the torque command Unit: x 10uS The torque filter parameters setting can reduce the vibration of the machine.
PA_01D [29]	First trapped wave frequency selection	ALL	25～1500	1500	It is used to set the frequency of the first trapped wave filter that suppresses resonance. 1500: Trapped wave filter function is disabled
PA_01E [30]	First trapped wave width selection	ALL	0～8	100	It is used to set the width of the first trapped wave filter that suppresses resonance. 0: The narrowest width. 8: The maximum width.
PA_01F [31]	Setting of position overflow auto reset	P	0～1	0	0: The position overflow is not processed, with the position range of -2147483648 ~ +2147483647 1: The position overflow will be processed, and the motor will never have an overflow problem. The motor rotates in CW direction. When the position is less than -100000000, it is reset to 100000000; or the motor rotates in CCW direction, when the position is greater than +100000000, and it is automatically reset to -100000000. Usually there is only one direction for servo application, and it is used at running incremental positions. The overflow portion is placed in another register, and the total position can be calculated in two places.
PA_020 [32]	Inertia ratio	ALL	0～10000	100	Set the ratio of the mechanical load inertia to the motor rotor inertia. in % Setting value: (load inertia / rotor inertia) x 100%
PA_021 [33]	Mechanical rigidity selection enabling	ALL	0～1	0	The rigid table selection enabling configuration. 0: PA_022 parameter setting is invalid, and gain integral and other parameters will maintain the most recent value. If the parameter is appropriate, please save the EEPROM, otherwise the power-on gain parameter will be overwritten by the EEPROM value. 1: PA_022 parameter setting is valid, and the corresponding gain parameter can be configured according to the rigidity selection level. The first set of gain parameters will be covered by the corresponding values, and the covered parameters are PA_010, PA_011, PA_012, PA_013, PA_014, PA_015, PA_016. Note: Only the first set of gains will be affected and the second set of gains will not be covered. If the user wants to use 2 sets of gains, please adjust the parameters in a certain state, record the values; and the corresponding coverage should be converted and saved in the second set of gain parameters.
PA_022	Gain	ALL	0～31	3	The mechanical rigidity level can be selected, and the PA_021 good parameter

[34]	mechanical stiffness rating selection				must be set to 1 to be valid. The larger the parameter setting, the faster the response
PA_026 [38]	Control method selection	P/S/T	0～1	0	Choose different PID algorithms for different values. 0: Smart PID, suitable for fast response occasions 1: I-P control, suitable for occasions with strong rigidity requirements
PA_028 [40]	The second trapped wave frequency selection	ALL	25～1500	0	It is used to set the frequency of the first trapped wave filter that suppresses resonance. 1500: Trapped wave filter function is disabled
PA_029 [41]	The second trapped wave width selection	ALL	100～1500	0	It is used to set the width of the first trapped wave filter that suppresses resonance. The dimension is the same as the Panasonic A5. 0: The narrowest width. 8: The maximum width.
PA_02A [42]	The second trapped wave depth selection	ALL	0～99	0	It is used to set the depth of the second trapped wave filter that suppresses resonance. The dimension is the same as the Panasonic A5. 0: The center frequency has the maximum attenuation 99: the center frequency has the smallest attenuation
PA_030 [48]	The 2nd gain action setting	All	0～1	1	It can be used to choose whether to use two-speed gain switching. 0: Select the 1st gain setting (PA_010~PA_014), at this time, the PI/P operation can be switched (then, the 1st gain and the 2nd gain cannot be switched, only be switched at PI/P) 1: It can be switched between the first gain (PA_010 to PA_014) and the second gain setting (PA_018 to PA_01C). Note: PI/P switching is performed by gain switching Gain pin signals.
PA_031 [49]	The first control switching mode	ALL	0～2	0	Define the trigger condition for the switching of two-step gain settings in the first control switching mode. **PA_031** — **Gain switching conditions** 0 — Fixed to the first gain 1 — Fixed to the second gain 2 — The gain switching terminal has an input, that is, it should be switched to the second gain Note: Valid in position control mode.
PA_032 [50]	Delay time of the first control switching	ALL	0～10000	100	When PA_031=2, the delay time from the detection of the trigger condition to the occurrence of the switching action during the switching from the 1st gain setting to the 2nd gain setting may be set. Unit: 250uS
PA_033 [51]	The first control switching level	ALL	0～20000	50	When PA_031=2, you can set the gain to switch to the trigger level.

<table>
<tr><td>PA_034
[52]</td><td>The first control switching delaying</td><td>ALL</td><td>0～20000</td><td>50</td><td>When PA_031=2, the hysteresis of the triggering action of the gain switching can be set.</td></tr>
<tr><td>PA_035
[53]</td><td>Position loop gain switching time</td><td>P</td><td>0～10000</td><td>50</td><td>In case of great changes when the second position loop gain is switched to the first position loop gain, this parameter can be used to suppress the rapid impact during the switching process.
If the position loop gain becomes larger, the switching time = (PA_035 + 1) * 250 uS.
If the position loop gain becomes smaller, the switching time is 0, that is, make switching immediately.
 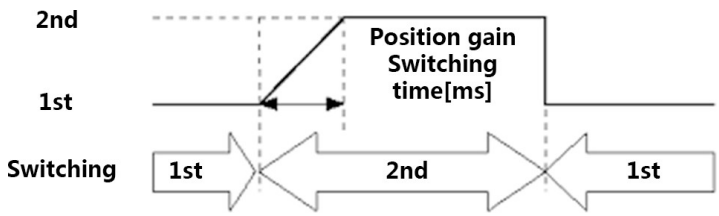 </td></tr>
<tr><td>PA_036
[54]</td><td>The second control switching mode</td><td>S/T</td><td>0～5</td><td>0</td><td>Define the trigger condition for the switching of two-step gain settings in the second control switching mode.
<table>
<tr><th>PA_036</th><th>Gain switching conditions</th></tr>
<tr><td>0</td><td>Fixed to the first gain</td></tr>
<tr><td>1</td><td>Fixed to the second gain</td></tr>
<tr><td>2</td><td>The gain switching terminal has an input, that is, it should be switched to the second gain</td></tr>
</table>
If PA_036=2, PA_003 = 2, it is fixed to the 1st gain
Different trigger conditions may vary depending on the control mode
Note: Valid under speed/torque control mode.</td></tr>
<tr><td>PA_037
[55]</td><td>Delay time of the first control switching</td><td>ALL</td><td>0～
10000</td><td>100</td><td>When PA_036=3 or 5, the delay time from the detection of the trigger condition to the occurrence of the switching action during the switching from the second gain setting to the first gain setting may be set. Unit: 250uS</td></tr>
<tr><td>PA_038
[56]</td><td>The first control switching level</td><td>ALL</td><td>0～20000</td><td>100</td><td>When PA_036=3~5, you can set the gain to switch to the trigger level.
Unit depends on the setting value of PA_036.</td></tr>
<tr><td>PA_039
[57]</td><td>The first control switching delaying</td><td>ALL</td><td>0～20000</td><td>100</td><td>When PA_036=3~5, the hysteresis of the triggering action of the gain switching can be set.
Unit depends on the setting value of PA_036.</td></tr>
<tr><td>PA_03A
[58]</td><td>Manufacturer parameters</td><td></td><td></td><td>0</td><td></td></tr>
<tr><td>PA_03B
[59]</td><td>Manufacturer parameters</td><td></td><td></td><td>0</td><td></td></tr>
<tr><td>PA_03C
[60]</td><td>Manufacturer parameters</td><td></td><td></td><td>0</td><td></td></tr>
</table>

PA_03D [61]	JOG speed setting	ALL	0～500	50	Set Jog speed Units: rpm
PA_03E [64]	Software Rev.	ALL	any	any	Software version number.
PA_03F [63]	Manufacturer parameters	ALL	any	-273	
PA_041 [65]	Command pulse rotation direction setting	P	0～1	0	The corresponding rotation direction and pulse form can be set according to the type of pulse command input.
PA_042 [66]	Command pulse input method	P	0～3	3	

PA_041	PA_042	Command pulse type	Signal name symbol	CCW command	CW command
0	0 or 2	Orthogonal pulse, A, B two phases, 90 degrees difference	PUL DIR	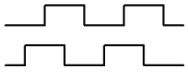 Phase B leads A phase for 90 degrees	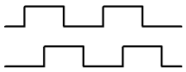 Phase A leads the phase B 90 for degrees
				PUL corresponds to phase A DIR corresponds to phase B	
	1	CCW Pulse + CW Pulse	PUL DIR	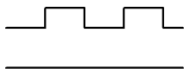	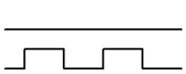
				PUL corresponds to CCW DIR corresponds to CW	
	3	Command pulse + Positive pulse	PUL DIR	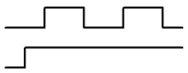	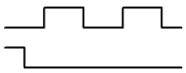
1	0 or 2	Orthogonal pulse, A, B two phases, 90 degrees difference	PUL DIR	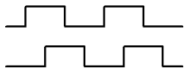 Phase A leads the phase B 90 for degrees	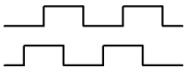 Phase B leads A phase for 90 degrees
				PUL corresponds to phase A DIR corresponds to phase B	
	1	CCW Pulse + CW Pulse	PUL DIR	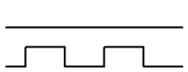	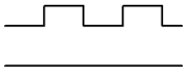
				PUL corresponds to CW DIR corresponds to CCW	
	3	Command pulse + command directi	PUL DIR	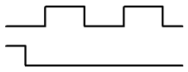	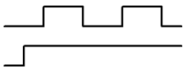

					on This parameter control power will be valid after power restarting.
PA_043 [67]	Command pulse Prohibit input settings	P	0～1	1	0: The command pulse's prohibition on terminal signal (INH) is valid; 1: The command pulse's prohibition on terminal signal (INH) is masked.
PA_045 [69]	Feedback pulse division factor	ALL	0～32767	1	0: number of feedback pulses per revolution = encoder resolution × 4 When it is not 0:

<table>
<tr><td>PA_046
[70]</td><td>Feedback pulse logic inversion</td><td>ALL</td><td>0～15</td><td>0</td><td>Bit0:
It can set whether the logic level of the B signal output by the encoder feedback signal is reversed.
0: It is not reversed
1: Reversed (encoder A/B feedback signal)
Used to set the phase relationship of the B signal with respect to the A phase signal
<table>
<tr><td rowspan="2">PA_046</td><td rowspan="2">Phase A (OA)</td><td>Motor rotates counterclockwise (CCW)</td><td>Motor rotates clockwise (CW)</td></tr>
<tr><td></td><td></td></tr>
<tr><td>0</td><td>Phase B (OB) It is not reversed</td><td></td><td></td></tr>
<tr><td>1</td><td>Phase B (OB) Negation</td><td></td><td></td></tr>
</table>
Bit1:
It can set whether the logic level of the Z signal output by the encoder feedback signal is reversed.
0: It is not reversed
1: It is reversed
Bit2: Selection of encoder feedback signal output content.
0: Select encoder AB signal output (The default is A/B crossover signal output)
1: Select the input pulse signal output. The A/B crossover signal shall be disabled simultaneously, the Bit0 setting is invalid with no effect on Bit1.</td></tr>
<tr><td>PA_048
[72]</td><td>Electronic gear ratio molecule 1</td><td>P</td><td>0～10000</td><td>1</td><td>It is used to set the frequency of the command pulse by frequency division or multiplication.
Calculation formula:
g
E g
Note: Only when the parameter PA_04A is set to 0, the electronic gear ratio can take effect.
The default is that the electronic gear ratio molecule 1 is effective, and it can be switched to the electronic gear ratio molecule 2 through the DI port.</td></tr>
<tr><td>PA_049
[73]</td><td>Electronic gear ratio molecule 2</td><td>P</td><td>0～10000</td><td>1</td><td>Refer to PA_048, electronic gear ratio molecule 1</td></tr>
<tr><td>PA_04A
[74]</td><td>Number of pulses required per revolution</td><td>P</td><td>0～32767</td><td>0</td><td>Directly set the number of pulses required for each revolution of the motor,
The electronic gear ratio molecule and denominator parameters are effective only when the parameter is 0.</td></tr>
<tr><td>PA_04B
[75]</td><td>Electronic gear ratio denominator</td><td>P</td><td>1～10000</td><td>1</td><td>Refer to PA_048, electronic gear ratio molecule 1</td></tr>
<tr><td>PA_04C
[76]</td><td>Smoothing filter</td><td>P</td><td>0～7</td><td>1</td><td>This parameter is only valid when PA_04D >= 512.
Set the primary delay filter parameters after inserting into the pulse command.</td></tr>
</table>

					Increasing the value of this parameter further smooth the command pulse but delays the response to the pulse command. 0: The filter is invalid. 1 to 7: The filter is valid.
PA_04D [77] *	FIR filter	P	0～ 513	512	When PA_04D < 512, the FIR filter of the pulse command is selected. The FIR filter is used to average the derivative of the instruction pulse. When PA_04D >= 512, FIR filter is invalid, select pulse smoothing filter PA_04C parameter
PA_04E [78]	Counter clearing input mode	P	0～2	1	Set the function of the counter clearing signal. 0: Clear the position deviation counter by level (CL and COM shall form short circuit at least 100uS). 1: Make clearing with a rising edge (open circuit -> short circuit at least 100uS). 2: This function is invalid, so block this function
PA_04F [79]	Analog dead zone	S/T	0～1000	10	Set the analog dead zone, unit: mV. For example, when PA_04F = 10, When the input voltage is -10mV < Vin < +10mV, then the effective Vi is 0. When Vin< -10mv or Vin > 10mV, then effective Vi = Vin.
PA_050 [80]	Speed command gain	S	10～2000	100	It is used to set the proportional relationship between the motor speed and the external analog (AI) voltage This parameter setting value = motor speed (RPM) required when input voltage is 1V
PA_051 [81]	Speed command Logic inversion	S	0～1	0	The logic level of the input analog speed command can be set. 0: When the “+” voltage command is input, the motor rotates counterclockwise. 1: When the "-" voltage command is input, the motor rotates counterclockwise. If PA_006=2, then this parameter setting is invalid.
PA_052 [82]	Speed/torque command zero drift adjustment	S/T	-2047～ +2047	0	It is used to adjust the zero drift of the input analog (AI) command. Unit: mV
PA_053 [83]	The first Internal speed	S	-3000 ～ +3000	0	Set the first speed of the internal speed command. Unit: RPM Overspeed level -- depends on the setting value of PA_073.
PA_054 [84]	The second Internal speed	S	-3000 ～ +3000	0	Set the second speed of the internal speed command. Unit: RPM Overspeed level -- depends on the setting value of PA_073.
PA_055 [85]	The third Internal speed	S	-3000 ～ +3000	0	Set the third speed of the internal speed command. Unit: RPM Overspeed level -- depends on the setting value of PA_073.
PA_056 [86]	The fourth Internal speed	S/T	-3000 ～ +3000	500	Under speed mode: set the fourth speed of the internal speed command. Unit: RPM Overspeed level -- depends on the setting value of PA_073. Under torque mode: as the speed setting value of speed limit, unit: RPM
PA_057 [87]	External analog command	S/T	0～6400	100	Set the parameters of the primary delay filter inserted after inserting into analog speed command/analog torque command. Unit: 10uS

	filter				
PA_058 [88]	Acceleration time setting	S	0～2500	100	Set the acceleration time under speed control mode. Unit: ms This parameter setting = the time required for the motor to accelerate from 0 to 1000 RPM (mS)
PA_059 [89]	Deceleration time setting	S	0～2500	100	Set the deceleration time under speed control mode. Unit: ms This parameter setting = the time required for the motor to decelerate from 0 to 1000 RPM (mS)
PA_05B [91]	Torque command selection	T	0	0	Select input analog torque command and speed limit value PA_05B: 0 — Torque command: External analog AI — SPEED LIMIT: PA_056
PA_05C [92]	Torque command gain	T	10～100	50	Set the proportional relationship between motor torque and external analog voltage (How many volts corresponds to 100% of rated torque) Unit: 0.1V/100%
PA_05D [93]	Torque command Logic inversion	T	0～1	0	Set the logic level of the analog torque command. 0: There is CCW counterclockwise torque output when inputting "+" voltage, 1: There is CCW counterclockwise torque output when inputting "-" voltage,
PA_05E [94]	1st torque limit	ALL	0～3000	2500	Set the 1st limit value of motor torque in % For torque limit selection, please refer to PA_003 (torque limit selection)
PA_05F [95]	2nd torque limit	ALL	0～3000	2500	Set the 2nd limit value of motor torque in % For torque limit selection, please refer to PA_003 (torque limit selection)
PA_060 [96]	Positioning completed **Range**	P	0～20000	100	You can set the range of positioning completion, that is, the number of pulses allowed. If the number of position deviation pulses is less than this value, the positioning completion signal (COIN) has an output.
PA_061 [97]	Zero speed detection threshold	ALL	10～ 20000	10	The detection threshold of the zero-speed detection signal (ZSP) can be set. Units: rpm If speed consistency is detected, set the appropriate speed based on the speed command. Note: There is a 10RPM hysteresis between zero speed detection and speed consistency detection.
PA_062 [98]	Reached speed	S/T	10~ 20000	100	The detection threshold of speed arrival signal (COIN) can be set. Units: rpm Note: There is a 10RPM hysteresis for the detection of the arrival speed
PA_063 [99]	Complete the signal output setting by position	P	0～3	0	The output condition of the positioning completion signal (COIN) can be set. PA_063 — COIN output condition 0 — If the number of pulses of position deviation is within the positioning completion range, the COIN signal has an output. 1 — If there is no position command and the position deviation pulse number is within the positioning completion range, the COIN signal has an output. 2 — If there is no position command and the zero-speed detection signal have an output (ON), and the position deviation pulse number is within the positioning completion range, the COIN signal has an output.

<table>
<tr><td></td><td></td><td></td><td></td><td></td><td>
<table>
<tr><td>3</td><td>If there is no position command and the pulses number of position deviation is reduced to within the positioning completion range, the COIN signal turns ON. After ON holds the INP hold time, it determines the ON/OFF of the COIN signal based on the position command and position deviation.</td></tr>
</table></td></tr>
<tr><td>PA_064
[100]</td><td>INP holding time</td><td>P</td><td>0～30000</td><td>1</td><td>Valid when PA_063 = 3. Unit: ms
The maintaining time when the COIN signal is active. During the holding time, the COIN is always valid, even if the conditions for positioning completion are not met (because it is not detected during this time).</td></tr>
<tr><td>PA_066
[102]
*</td><td>Setting of alarm timing setting of stroke limit</td><td>ALL</td><td>0～2</td><td>2</td><td>Set the driving condition of the motor deceleration process after the stroke limit signal is triggered or valid.
<table>
<tr><td colspan="2">PA_066</td><td>During deceleration</td><td>After the motor stops</td><td>Deviation counter content</td></tr>
<tr><td colspan="2">0</td><td>DB
(It is not supported)</td><td>Limit alarm direction torque command=0</td><td>Conserve</td></tr>
<tr><td colspan="2">1</td><td>Limit alarm direction torque command=0</td><td>Limit alarm direction torque command=0</td><td>Conserve</td></tr>
<tr><td rowspan="2">2</td><td>Control modes</td><td rowspan="2">Servo locking (position command = 0)</td><td rowspan="2">Limit alarm direction position command=0</td><td rowspan="2">Make clearing before or after deceleration</td></tr>
<tr><td>P</td></tr>
<tr><td></td><td>S/T</td><td>Zero speed clamp (speed command = 0, deceleration time = 0)</td><td>Limit alarm direction speed command=0</td><td>---</td></tr>
</table>
Note:
1. If PA_066=2, then the torque limit value is the emergency torque limit value, i.e. PA_06E setting value.
2. If PA_066=0, DB is not supported at this time, that is, dynamic braking.
3. The control power supply shall be restarted for the effective parameter setting.</td></tr>
<tr><td>PA_06A
[106]</td><td>Mechanical brake delay when the motor stops</td><td>ALL</td><td>0～100</td><td>50</td><td>It can set the delay time from mechanical brake signal (BRK-OFF) to motor power failure when turning off the servo enable signal during stop status of motor (servo lock).
Unit: x2mS</td></tr>
<tr><td>PA_06B
[107]</td><td>Mechanical brake delay when the motor runs</td><td>ALL</td><td>0～100</td><td>50</td><td>It can set the delay time from mechanical brake signal (BRK-OFF) to motor power failure when turning off the servo enable signal during running status of motor (servo lock).
Unit: x2mS
Note: If the motor speed drops to 30 rpm before this set time, the BRK-OFF signal is turned off.</td></tr>
</table>

<table>
<tr><td>PA_06C
[108]</td><td>Setting of external brake resistance</td><td>ALL</td><td>0～3</td><td>0</td><td>Set the brake resistor and its overload protection (Err18) function.
<table>
<tr><td>Setpoint</td><td>Protection Function</td></tr>
<tr><td>0</td><td>Use an internal braking resistor and enable protection for it. If the brake resistor operation limit value exceeds 10%, it will cause an excessive brake rate alarm.</td></tr>
<tr><td>1</td><td>Use an external braking resistor and enable protection for it. If the brake resistor operation limit value exceeds 10%, it will cause an excessive brake rate alarm.</td></tr>
<tr><td>2</td><td>An external braking resistor is used, but the protection function is not enabled.</td></tr>
<tr><td>3</td><td>Do not enable the brake circuit, and discharge completely relying on the built-in capacitor</td></tr>
</table></td></tr>
<tr><td>PA_06E
[110]</td><td>Speed setting during emergency stop</td><td>ALL</td><td>0～3000</td><td>2500</td><td>When PA_066=2, the deceleration process during the stroke limit.</td></tr>
<tr><td>PA_070
[112]</td><td>Position deviation is too large</td><td>P</td><td>0～32767</td><td>0</td><td>Set the detection range where the position pulse deviation number is too large.
Unit: x 256 x encoder resolution (i.e. x 256 pulses).
If this parameter is set to 0, the position deviation excessive detection function is canceled.</td></tr>
<tr><td>PA_071
[113]</td><td>Analog command is too large</td><td>S/T</td><td>0～100</td><td>100</td><td>It is used to set the input analog speed command, or it is used to detect whether the voltage is too high after the torque command is compensated by zero drift.
Unit: x0.1V
If this parameter is set to 0, the detection function for too large analog command will be canceled.</td></tr>
<tr><td>PA_072
[114]</td><td>Overload level</td><td>ALL</td><td>0~
3000</td><td>0</td><td>The overload level of the motor can be set. Unit: ‰
If you need a lower overload level, set this parameter in advance.
0: 1.05 times overload threshold, with overload time * 1 times
1:1.20 times overload threshold, with overload time *0.875 times
1:1.30 times overload threshold, with overload time *0.750 times
3: 1.05 times overload threshold, with overload time * 0.5 times
4：1.20 times overload threshold, with overload time * 1 times (for special occasions)
5：1.30 times overload threshold, with overload time * 1 times (for special occasions)
6：1.50 times overload threshold, with overload time * 0.875 times (for special occasions)
7: 1.05 times overload threshold, with overload time * 1.125 times
8: 1.05 times overload threshold, with overload time * 1.250 times
9: 1.05 times overload threshold, with overload time * 1.375 times
10: 1.05 times overload threshold, with overload time * 1.50 times
11: 1.05 times overload threshold, with overload time * 1.625 times
12: 1.05 times overload threshold, with overload time * 1.75 times
Other, overload threshold = (overload level/1000 times), overload time of 1 time</td></tr>
<tr><td>PA_073
[115]</td><td>Overspeed level</td><td>ALL</td><td>0～20000</td><td>0</td><td>Set the motor overspeed level. Units: rpm
If this parameter is set to 0, the motor overspeed level is 1.2 times of the maximum speed of the motor.</td></tr>
</table>

					This parameter can be set up to 1.2 times the maximum motor speed
PA_074 [116]	The fifth Internal speed	S	-3000 ～ +3000	0	Set the fifth speed of the internal speed command. Unit: RPM Overspeed level -- depends on the setting value of PA_073.
PA_075 [117]	The sixth Internal speed	S	-3000 ～ +3000	0	Set the sixth speed of the internal speed command. Unit: RPM Overspeed level -- depends on the setting value of PA_073.
PA_076 [118]	The seventh Internal speed	S	-3000 ～ +3000	0	Set the seventh speed of the internal speed command. Unit: RPM Overspeed level -- depends on the setting value of PA_073.
PA_077 [119]	The eighth Internal speed	S/T	-3000 ～ +3000	0	Under speed mode: Set the eighth speed of the internal speed command. Unit: RPM Overspeed level -- depends on the setting value of PA_073.
PA_07D [125]	Current loop gain				Current loop gain.
PA_07E [126]	Current loop integral time constant				Unit: 62.5uS
PA_07F [127]	Dead zone setting	ALL	1000～ 5000	2000	Unit: us
PA_080 [128]	DIO configuration	ALL	0～ 22	0	The functional configuration indicated by DIx.
PA_081 [129]	DI1 configuration	ALL		1	
PA_082 [130]	DI2 configuration	ALL	0～ 22	2	
PA_083 [131]	DI3 configuration	ALL	0～ 22	3	
PA_084 [132]	DI4 configuration	ALL	0～ 22	10	
PA_085 [133]	DI 5 Configuration	ALL	0～ 22	8	
PA_086 [134]	DI6 configuration	ALL	0～ 22	15	

Setpoint	Mark	Function or meaning
0	SRV-ON	Servo enabling
1	A-CLR	Clear alarm
2	CWL	Clockwise stroke limit
3	CCWL	Anticlockwise stroke limit
4	C-MODE	Control mode switching
5	ZEROSPD	Zero speed clamp
6	DIV	Command pulse division frequency selection
7	SPD_DIR	Speed command direction, PA_006=2 is valid, and others are invalid
8	INH	Command pulse prohibition
9	GAIN	Gain switching
10	CL	Clear the deviation counter to 0
11	INTSPD1	Internal speed 1
12	INTSPD2	Internal speed 2
13	INTSPD4	Internal speed 4
14	INTSPD3	Internal speed 3
15	TL-SEL	Torque limit switchover
16	Homing	Start position of "back to zero"
17	ORG_SW	Origin switch position

PA_087 [135]	DI7 configuration	ALL	0～22	16	18 POS_LOCK Servo locking 19 JOG_BIT JOG starting position 20 POS_LOAD Position loading signal 21 EMG Emergency stop or external error input
PA_088 [136]	DO0 configuration	ALL	0~17	0	DOx output indication. DOx output indication. Setpoint / Mark / Function or meaning 0 S-RDY Servo ready 1 ALM Servo alarm 2 COIN Location arrival 3 BRK-OFF Brake Release 4 ZSP Zero speed detection 5 TLC Torque limiting 6 V-COIN Speed consistency 7 AT-SPEED Speed arrival 8 EX-COIN Full closed loop position arrival 9 OVERLOAD_O OVERLOAD WARNING 10 BRAKE_ON Brake pipe conduction state 11 ORG_FOUND Origin has been found 12 support not planned 13 support not planned 14 BRAKE_ON_ERR_O Brake error message 15 EEPROM_STATE_O EEPROm completion status 16 JOG_RUN JOG run bit, set to 1 if in JOG state 17 Homing_actived 1: zero returning is at running position 0: Zero return action is not started
PA_089 [137]	DO1 configuration	ALL	0~17	1	
PA_08A [138]	DO2 configuration	ALL	0~17	2	
PA_08B [139]	DO3 configuration	ALL	0~17	3	
PA_08C [140]	DO4 configuration	ALL	0~17	4	
PA_08D [141]	DO5 configuration	ALL	0~17	**5**	
PA_08E [142]	IO_ polarity reverse setting	ALL	-32768 ～ 32767	0	Polarity reverse setting of IO The lower 8 bits, input the polarity setting of IO. Bit0 corresponds to DI0, Bit1 corresponds to DI1, and Bit7 corresponds to DI7. The higher 8 bits, output the polarity setting of IO. Bit8 corresponds to DO0, and bit9 corresponds to bitDO1.
PA_08F [143]	Servo enable mode configuration	ALL	0～2	0	0: External command or communication command enabling 1: Power-on automatic enabling

6.2 Extended Parameter Description

Number	Parameter name	Correl-ation Mode	Setting Range	Defaults	Function and meaning
PA_090 [144]	Control mode setting	ALL	0～1	0	Control mode setting: 0: standard mode; 1: Extended function mode (using communication control).
PA_091 [145]	Position mode index	P	0～15	0	PA_090 =1, valid in multi-segment position mode, indicating the serial number of the multi-segment position.

					When INTSPD1~INTSPD4 are not configured in the DI configuration, the value of this parameter can be modified by communication to achieve multi-segment position switching. In the DI parameter configuration, as long as the INTSPD1 is selected and configured, the servo internally automatically determines the index of the position according to the values of INTSPD1 to INTSPD4, and realizes the switching of the multi-segment position.
PA_092 [146]	Index of communicatio n speed	S	0～31	0	PA_090 =1, valid in multi-segment speed mode, indicating the serial number of the multi-segment speed. When INTSPD1~INTSPD4 are not configured in the DI configuration, the value of this parameter can be modified by communication to achieve multi-segment speed switching. In the DI parameter configuration, as long as the INTSPD1 is selected and configured, the servo internally automatically determines the index of the speed according to the values of INTSPD1 to INTSPD4, and realizes the switching of the multi-segment speed.
PA_093 [147]	Torque mode index	T	0～15	0	PA_090 =1, valid in multi-segment torque mode, indicating the serial number of the multi-segment torque. When INTSPD1~INTSPD4 are not configured in the DI configuration, the value of this parameter can be modified by communication to achieve multi-segment torque switching. In the DI parameter configuration, as long as the INTSPD1 is selected and configured, the servo internally automatically determines the index of the torque according to the values of INTSPD1 to INTSPD4, and realizes the switching of the multi-torque speed.
PA_094 [148]	Absolute or relative position control Settings	ALL	0～7	0	When PA_090 =1, and this parameter is valid. Bit0: Absolute or relative position control setting. 0: Absolute position control, and position command indicates absolute position command. 1: Relative position control, and position command indicates relative position command.
PA_096 [150]	Setting of multi-segment position loading mode	P	0～2	0	

PA_096	PA_094	
0	0 (absolute position)	The load signal is always active and always loaded
	1 (relative position)	The load signal is always active and always loaded. After each load, the command source will be cleared to 0. (suitable for communication control).
1	0 (absolute position)	PosLoad is loaded at high level, and the low position command will be held.
	1 (relative position)	Not supported (load signal is invalid)
2	0 (absolute position)	The rising edge of PosLoad initiates a load, and other position commands remain.
	1 (relative position)	The rising edge of PosLoad initiates a load, and other position commands remain.

PA_0A0 [160]	Zeroing method configuration	ALL	0～1	0	0: homing signal; It returns to zero when the level is valid, and it stops the zero returning immediately if the level is invalid 1: Power-on automatic zero returning.
PA_0A1 [161]	Zero returning mode	ALL	0～15	12	Note: Refer to the description of the zero returning function.
PA_0A2 [162]	Rotate speed of high-speed searching origin signals	ALL	0~3000	300	
PA_0A3 [163]	Rotate speed of low-speed searching origin signals	ALL	0~500	50	
PA_0A4 [164]	Search for the acceleration/deceleration time of the origin	ALL	0~2500	100	
PA_0A5 [165]	Mechanical origin offset	ALL	-32768~+32767	0	
PA_0A6 [166]	Origin search timeout	ALL	0~1000	0	0: No error is reported. If it is not equal to 0, indicating the timeout period, unit: x 100mS
PA_0A8 [168]	Inertia recognition mode	ALL	0	0	0: Offline tuning
PA_0A9 [169]	Maximum inertia recognition speed	P/S	0~3000	800	Units: rpm
PA_0AA [170]	Maximum acceleration time of inertia recognition	P/S	5~1000	100	Acceleration time of inertia recognition is the acceleration or deceleration time of 0 ~ 1000RPM. Unit: ms
PA_0AB [171]	First rotation direction of inertia recognition	P/S	0～1	0	0: The first rotation direction is CCW counterclockwise 1: The first direction of rotation is CW clockwise. This parameter is related to mechanical installation. It is necessary to actually check in which direction the motor can be rotated to prevent it from colliding with other components.

PA_0AC [172]	Maximum angular displacement of rotation in inertia identification	P/S	any	10	The maximum angular displacement during inertia identification. Unit: X 0.1 circle. 11 means 1.1 circles. This parameter is a read parameter. When setting PA_0A9, PA_0AA. The corresponding maximum angular displacement will be displayed here. The PA_0A9 and PA_0AA can be adjusted by viewing this value. Prevent mechanical collisions.
PA_0AD [173]	Test cycle numbers	P/S	1~10	2	Set the number of tests during the inertia tuning process. The measurement test is N+1; the number of tests should be set to 2 times. One test consists of turning back and forth. The motor eventually will be returned to the starting point.
PA_0AE [174]	Inertia measurement value.	P/S			The total inertia value after tuning. Unit: X 10^-6 kg.m^2. P20 is the value of the inertia ratio, and will be modified after the setting is completed. The user needs to save it manually.
PA_0AF [175]	Setting type Enable	P/S	0～2	0	0: It is not enabled 1: The inertia setting is performed, and the setting is automatically cleared to 0. Note: After the inertia is set, the inertia ratio P20 will be modified to the appropriate value. The user needs to manually save the structure after tuning. Otherwise, the power will be restored and the inertia ratio will return to the original value.
PA_0B2 [178]	Setting result	ALL	0	0	1: The setting has been completed. 0: The setting was failed.
PA_121 [289]	Error record 0				
PA_122 [290]	Error record 1				
PA_123 [291]	Error record 2				
PA_124 [292]	Error record 3				
PA_125 [293]	Error record 4				
PA_126 [294]	Error record 5				
PA_127 [295]	Error record 6				
PA_128 [296]	Error record 7				
PA_129 [297]	Error record 8				
PA_12A [298]	Error record 9				

Protection Function	Alarm code
Overvoltage	12
Undervoltage	13
Overcurrent and grounding errors	14*
Over heating	15
Excessive load	16
Regenerative discharge resistance overload (over-braking rate is too large)	18
Encoder error	21
Excessive position deviation	24
Overspeed	26
Command pulse division frequency error	27
Deviation counter overflow	29
EEPROM parameter error	36
Stroke limit input signal error	38
Analog command overvoltage	39
system error	1
DI configuration error	2
Communication Errors	3
The control power is off	4
Fpga internal error	5
Zeroing timeout	6

Note: Please refer to Chapter 8: Protection Function for the cause of the specific fault.

PA_12C [300]	Internal torque command 0	T	-3000～3000	0	The 0th internal torque command
PA_12D [301]	Internal torque command 1	T	-3000～3000	0	The 1st internal torque command
PA_12E [302]	Internal torque command 2	T	-3000～3000	0	The 2nd internal torque command
PA_12F [303]	Internal torque command 3	T	-3000～3000	0	The 3rd internal torque command
PA_130 [304]	Internal torque command 4	T	-3000～3000	0	The 4th internal torque command
PA_131 [305]	Internal torque command 5	T	-3000～3000	0	The 5th internal torque command
PA_132 [306]	Internal torque command 6	T	-3000～3000	0	The 6th internal torque command
PA_133 [307]	Internal torque command 7	T	-3000～3000	0	The 7th internal torque command
PA_134 [308]	Internal torque command 8	T	-3000～3000	0	The 8th internal torque command
PA_135 [309]	Internal torque command 9	T	-3000～3000	0	The 9th internal torque command
PA_136 [310]	Internal torque command 10	T	-3000～3000	0	The 10th internal torque command
PA_137 [311]	Internal torque command 11	T	-3000～3000	0	The 11th internal torque command
PA_138 [312]	Internal torque command 12	T	-3000～3000	0	The 12th internal torque command
PA_139 [313]	Internal torque command 13	T	-3000～3000	0	The 13th internal torque command
PA_13A [314]	Internal torque command 14	T	-3000～3000	0	The 14th internal torque command
PA_13B [315]	Internal torque command 15	T	-3000～3000	0	The 15th internal torque command
PA_140 [320]	Internal speed command 0	S	-3000～3000	0	The 0th internal speed command
PA_141 [321]	Internal speed command 1	S	-3000～3000	0	The 1st internal speed command
PA_142 [322]	Internal speed command 2	S	-3000～3000	0	The 2st internal speed command
PA_143 [323]	Internal speed command 3	S	-3000～3000	0	The 3rd internal speed command
PA_144 [324]	Internal speed command 4	S	-3000～3000	0	The 4th internal speed command
PA_145 [325]	Internal speed command 5	S	-3000～3000	0	The 5th internal speed command

PA_146 [326]	Internal speed command 6	S	-3000～3000	0	The 6th internal speed command
PA_147 [327]	Internal speed command 7	S	-3000～3000	0	The 7th internal speed command
PA_148 [328]	Internal speed command 8	S	-3000～3000	0	The 8th internal speed command
PA_149 [329]	Internal speed command 9	S	-3000～3000	0	The 9th internal speed command
PA_14A [330]	Internal speed command 10	S	-3000～3000	0	The 10th internal speed command
PA_14B [331]	Internal speed command 11	S	-3000～3000	0	The 11th internal speed command
PA_14C [332]	Internal speed command 12	S	-3000～3000	0	The 12th internal speed command
PA_14D [333]	Internal speed command 13	S	-3000～3000	0	The 13th internal speed command
PA_14E [334]	Internal speed command 14	S	-3000～3000	0	The 13th internal speed command
PA_14F [335]	Internal speed command 15	S	-3000～3000	0	The 15th internal speed command
PA_150 [336]	Internal speed command 16	S	-3000～3000	0	The 16th internal speed command
PA_151 [337]	Internal speed command 17	S	-3000～3000	0	The 17th internal speed command
PA_152 [338]	Internal speed command 18	S	-3000～3000	0	The 18th internal speed command
PA_153 [339]	Internal speed command 19	S	-3000～3000	0	The 19th internal speed command
PA_154 [340]	Internal speed command 20	S	-3000～3000	0	The 20th internal speed command
PA_155 [341]	Internal speed command 21	S	-3000～3000	0	The 21st internal speed command
PA_156 [342]	Internal speed command 2	S	-3000～3000	0	The 22nd internal speed command
PA_157 [343]	Internal speed command 23	S	-3000～3000	0	The 24th internal speed command
PA_158 [344]	Internal speed command 24	S	-3000～3000	0	The 24th internal speed command
PA_159 [345]	Internal speed command 25	S	-3000～3000	0	The 25th internal speed command
PA_15A [346]	Internal speed command 26	S	-3000～3000	0	The 26th internal speed command

PA_15B [347]	Internal speed command 27	S	-3000～3000	0	The 27th internal speed command
PA_15C [348]	Internal speed command 28	S	-3000～3000	0	The 28th internal speed command
PA_15D [349]	Internal speed command 29	S	-3000～3000	0	The 29th internal speed command
PA_15E [350]	Internal speed command 30	S	-3000～3000	0	The 30th internal speed command
PA_15F [351]	Internal speed command 31	S	-3000～3000	0	The 31st internal speed command
PA_168 [360]	Internal position command 0	P	any	0	The 0th internal position command
PA_169 [361]					
PA_16A [362]	Internal position command 1	P	any	0	The 1st internal position command
PA_16B [363]					
PA_16C [364]	Internal I position command 2	P	any	0	The 2nd internal position command
PA_16D [365]					
PA_16E [366]	Internal position command 3	P	any	0	The 3rd internal position command
PA_16F [367]					
PA_170 [368]	Internal position command 4	P	any	0	The 4th internal position command
PA_171 [369]					
PA_172 [370]	Internal position command 5	P	any	0	The 5th internal position command
PA_173 [371]					
PA_174 [372]	Internal position command 6	P	any	0	The 6th internal position command
PA_175 [373]					
PA_176 [374]	Internal position command 7	P	any	0	The 7th internal position command
PA_177 [375]					

PA_178 [376]	Internal position command 8	P	any	0	The 8th internal position command
PA_179 [377]					
PA_17A [378]	Internal position command 9	P	any	0	The 9th internal position command
PA_17B [379]					
PA_17C [380]	Internal position command 10	P	any	0	The 10th internal position command
PA_17D [381]					
PA_17E [382]	Internal position command 11	P	any	0	The 11th internal position command
PA_17F [383]					
PA_180 [384]	Internal position command 12	P	any	0	The 12th internal position command
PA_181 [385]					
PA_182 [386]	Internal position command 13	P	any	0	The 13th internal position command
PA_183 [387]					
PA_184 [388]	Internal position command 14	P	any	0	The 14th internal position command
PA_185 [389]					
PA_186 [390]	Internal position command 15	P	any	0	The 15th internal position command
PA_187 [391]					
PA_190 [400]	Internal position 0 speed	P	0～3000	0	
PA_191 [401]	Internal position 1 speed	P	0～3000	0	
PA_192 [402]	Internal position 2 speed	P	0～3000	0	
PA_193	Internal	P	0～3000	0	

[403]	position 3 speed				
PA_194 [404]	Internal position 4 speed	P	0～3000	0	
PA_195 [405]	Internal position 5 speed	P	0～3000	0	
PA_196 [406]	Internal position 6 speed	P	0～3000	0	
PA_197 [407]	Internal position 7 speed	P	0～3000	0	
PA_198 [408]	Internal position 8 speed	P	0～3000	0	
PA_199 [409]	Internal position 9 speed	P	0～3000	0	
PA_19A [410]	Internal position 10 speed	P	0～3000	0	
PA_19B [411]	Internal position 11 speed	P	0～3000	0	
PA_19C [412]	Internal position 12 speed	P	0～3000	0	
PA_19D [413]	Internal position 13 speed	P	0～3000	0	
PA_19E [414]	Internal position 14 speed	P	0～3000	0	
PA_19F [415]	Internal position 15 speed	P	0～3000	0	
PA_1A0 [416]	External IO or analog IO selection	ALL	any	0	bit0： 0 --- select external IO, DI0 1Select analog IO, analog IO, Sim_DI0, communication address is P1A45 Similarly, Bit1 to Bit7

PA_1A4 [420]	Communication simulation IO	ALL	any	0	Bit0: The function is equivalent to external IO. It is valid when bit 0 of P1A0 is 1. Its function has P80 register configuration. Similarly, Bit1~Bit7: equivalent to DI1~DI7.
PA_1A5 [421]	Analog IO mask	ALL	any	0	Each bit of this parameter can mask the bit corresponding to the P1A4 communication analog IO. For example, if Bit0 is 1, the bit 0 of P1A4 can be masked.
PA_1A7 [423]	Communication function code	ALL	any		0x0801 -----Save all parameters 0x0802 ------Clear error history
PA_1B6 [438]	Position instruction overflow register	ALL	any	0	Position overflow counter lower 16 bits
PA_1B7 [439]		ALL	any	0	Position overflow counter higher 16 bits
PA_1B8 [440]	Command position	ALL	any	0	Current instruction position is 16 bits lower
PA_1B9 [441]		ALL	any	0	Current instruction position is 16 bits higher
PA_1BA [442]	The user coordinate	ALL	any	0	Current user coordinates are 16 bits lower
PA_1BB [443]		ALL	any	0	Current user coordinates are 16 bits higher
PA_1BC [444]	Position feedback	ALL	any	0	Current feedback position is 16 bits lower
PA_1BD [445]		ALL	any	0	Current feedback position is 16 bits higher
PA_1BE [446]	Position deviation	ALL	any	0	Current positional deviation is 16 bits lower
PA_1BF [447]		ALL	any	0	Current positional deviation is 16 bits higher
PA_1C0 [448]	Command speed	ALL	any	0	Current command speed Unit [RPM]
PA_1C1 [449]	Feedback speed	ALL	any	0	Current feedback speed. Unit [RPM]
PA_1C2 [450]	speed deviation	ALL	any	0	Current speed deviation. Unit [RPM]
PA_1C3 [451]	Command torque	ALL	any	0	Current command torque Unit [0.1%]
PA_1C4 [452]	Feedback torque	ALL	any	0	Current Feedback torque Unit [0.1%]
PA_1C5 [453]	Torque deviation	ALL	any	0	Current torque deviation. Unit [0.1%]

PA_1C8 [456]	System Status	ALL	any	0	System status
PA_1C9 [457]	error code	ALL	any	0	Error code. For the introduction of error codes, please refer to historical record number parameter: PA_121
PA_1CA [458]	Control modes	ALL	any	0	Current control mode
PA_1CB [459]	location index	ALL	0～20	0	Position index under work
PA_1CC [460]	Index of speed	ALL	0～36	0	Speed index under work
PA_1CD [461]	Torque index	ALL	0～36	0	Torque index under work
PA_1CE [462]	Servo command 1	ALL	any	0	
PA_1CF [463]	Servo command 2	ALL	any	0	

Setpoint	Mark	Function or meaning
0	S-RDY	Servo ready
1	ALM	Servo alarm
2	COIN	Location arrival
3	BRK-OFF	Brake Release
4	ZSP	Zero speed detection
5	TLC	Torque limiting
6	V-COIN	Speed consistency
7	AT-SPEED	Speed arrival
8	EX-COIN	Full closed loop position arrival
9	OVERLOAD_O	OVERLOAD WARNING
10	BRAKE_ON	Brake pipe conduction state
11	ORG_FOUND	Origin has been found
12		support not planned
13		support not planned
14	BRAKE_ON_ERR_O	Brake error message
15	EEPROM_STATE_O	EEPROm completion status
16	JOG_RUN	JOG run bit, set to 1 if in JOG state
17	Homing_atived	1: zero returning is at running position 0: Zero return action is not started

PA_1D0 [464]	Servo status 1	ALL	any	0	
PA_1D1 [465]	Servo status 2	ALL	any	0	
PA_1D2 [466]	Digital DI input	ALL	any	0	Digital input display. Bit0 ---- DI0 Bit1 ---- DI1 Bit2 ---- DI2 Bit3 ---- DI3 Bit4 ---- DI4 Bit5 ---- DI5 Bit6 ---- DI6 Bit7 ---- DI7
PA_1D3 [467]	Digital DO input	ALL	any	0	Digital output display. Bit0 ---- DO0 Bit1 ---- DO1 Bit2 ---- DO2 Bit3 ---- DO3 Bit4 ---- DO4 Bit5 ---- DO5
PA_1D4 [468]	Analog input AI0	ALL	any	0	Analog input voltage. Unit [mV]
PA_1D9 [473]	Busbar Voltage	ALL	any	0	DC bus voltage. Unit [V]
PA_1DA [474]	Module temperature	ALL	any	0	ADC value of module temperature.
PA_1DB [475]	Torque load ratio	ALL	any	0	Torque load ratio. Unit [%]
PA_1DC [476]	Resistance braking rate	ALL	any	0	Resistance braking rate. Unit [%]
PA_1DD [477]	Torque overload rate	ALL	any	0	Torque overload rate. Unit [%]
PA_1DE [478]	Reason for motor failure	ALL	any	0	Reason for motor failure. Refer to Chapter 7 of display code description for the reason why the motor of the panel and the button operation does not run:

Setpoint	Mark	Function or meaning
0	S-RDY	Servo ready
1	ALM	Servo alarm
2	COIN	Location arrival
3	BRK-OFF	Brake Release
4	ZSP	Zero speed detection
5	TLC	Torque limiting
6	V-COIN	Speed consistency
7	AT-SPEED	Speed arrival
8	EX-COIN	Full closed loop position arrival
9	OVERLOAD_O	OVERLOAD WARNING
10	BRAKE_ON	Brake pipe conduction state
11	ORG_FOUND	Origin has been found
12		support not planned
13		support not planned
14	BRAKE_ON_ERR_O	Brake error message
15	EEPROM_STATE_O	EEPROm completion status
16	JOG_RUN	JOG run bit, set to 1 if in JOG state
17	Homing_atived	1: zero returning is at running position 0: Zero return action is not started

Chapter 7 Panel Display and Button Description

7.1 Introduction to the button interface

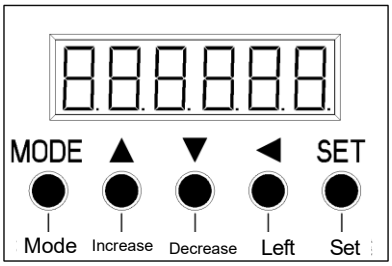

MODE	Switch among 5 modes
SET	1. It's used to switch between mode display and execution display 2. Confirm the operation
▲	Increase the value or serial number. Change the display content in the mode, change parameters, select parameters or perform selected operations
▼	Reduce the value or serial number. Change the display content in the mode, change parameters, select parameters or perform selected operations
◀	Move the movable decimal point to the left by one. (If the decimal point has reached the highest position, move it to the lowest position)

7.2 Schematic diagram of each mode switching

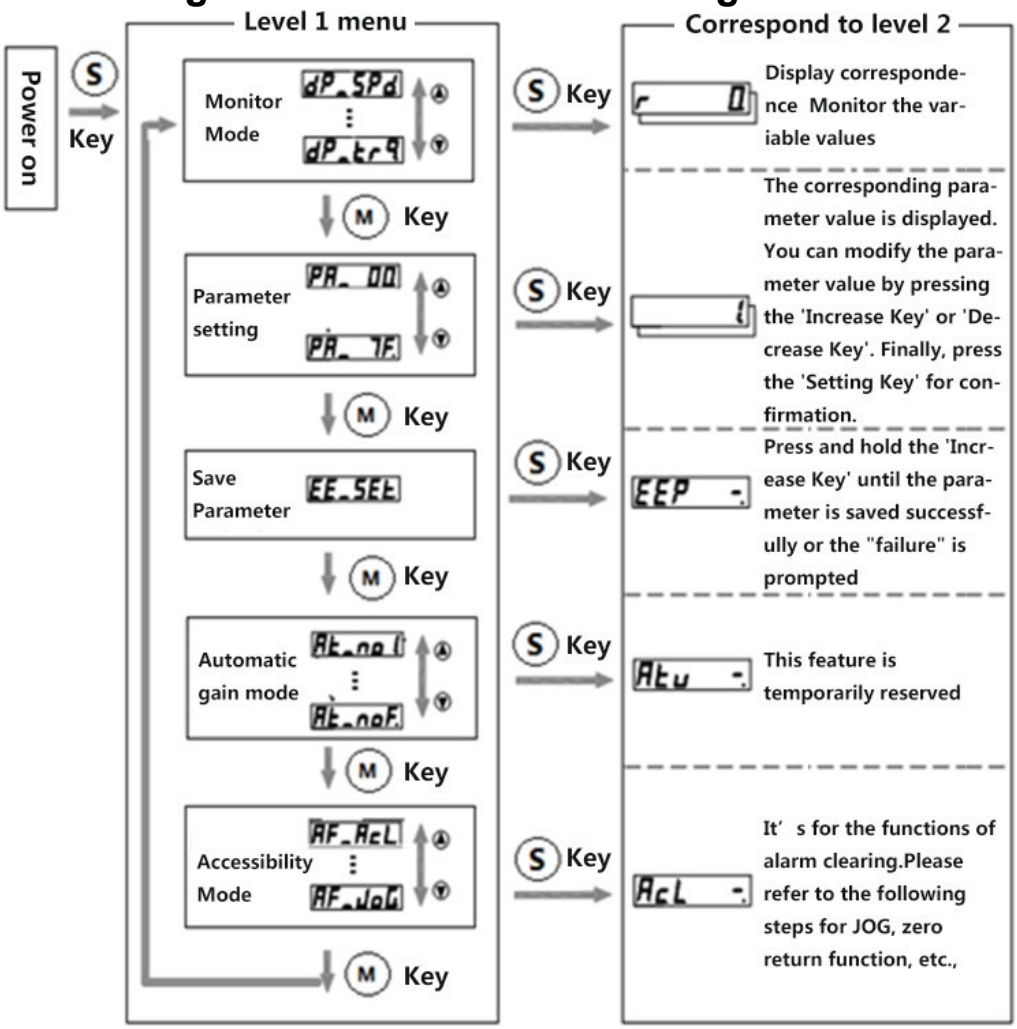

7.3 Monitoring parameter switching

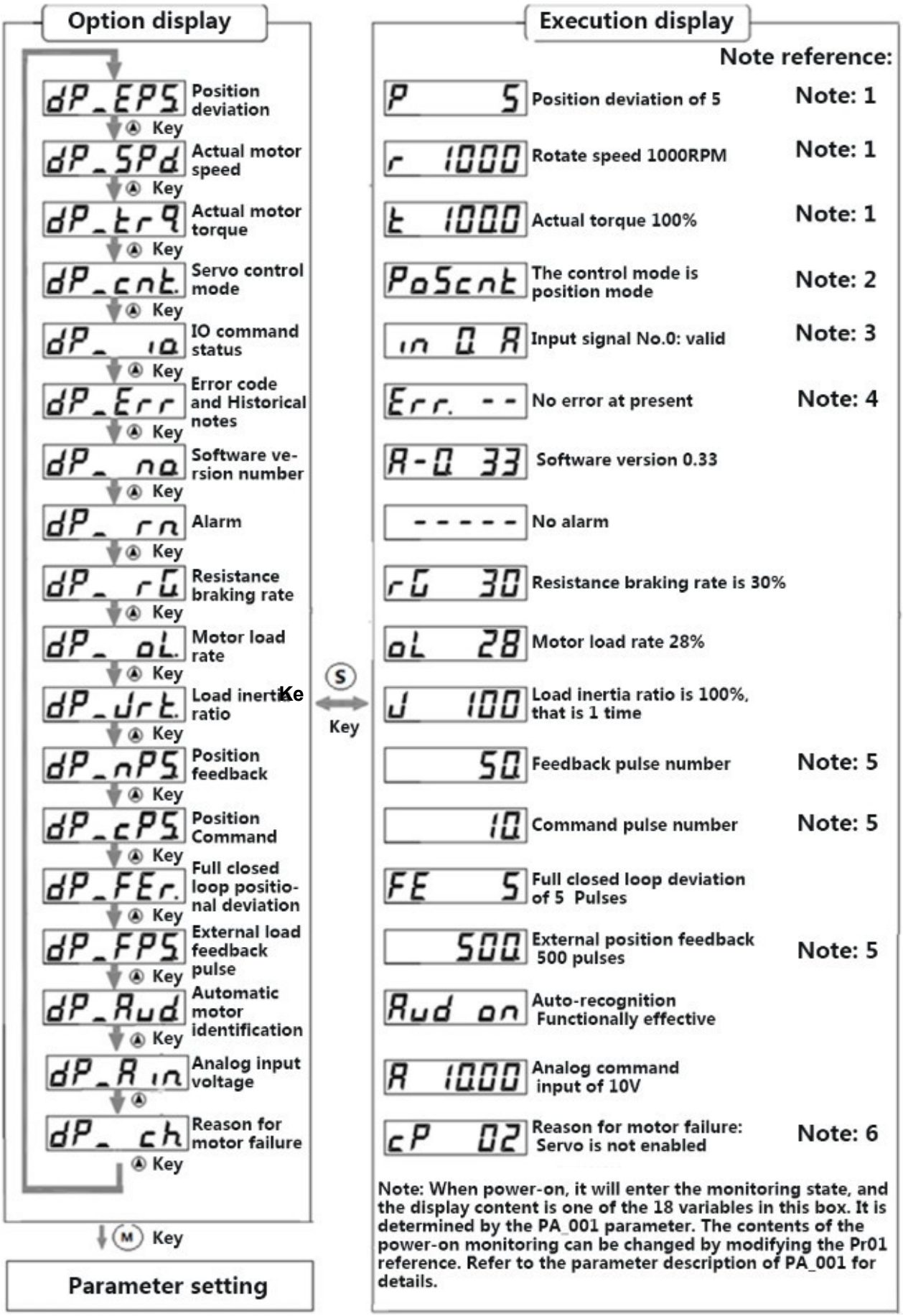

Note 1 :(position deviation, motor speed, torque output display)

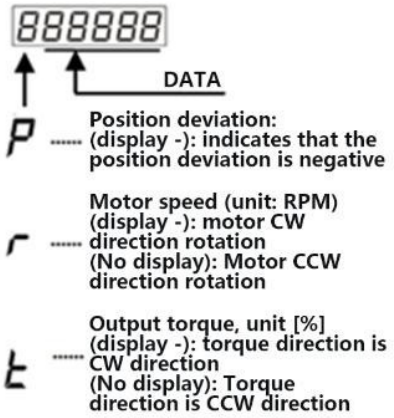

Note 2: (Display of control mode)

PoScnt ---Position control mode SPdcnt --- Speed control mode

trqcnt ---Torque control mode

Note 3: (input and output status display)

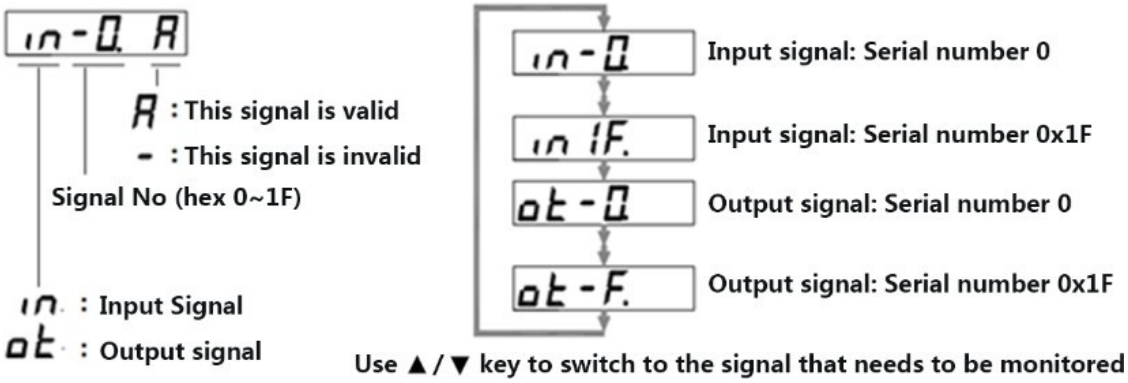

Note 4: (alarm error and historical reasons)

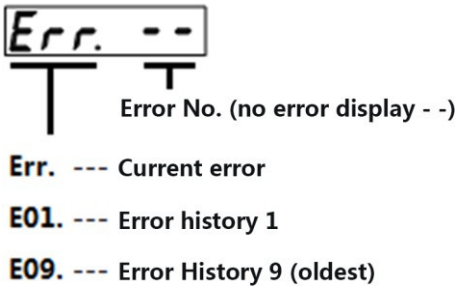

Note 5: (Number of feedback pulses, number of command pulses, and number of external device feedback pulses)

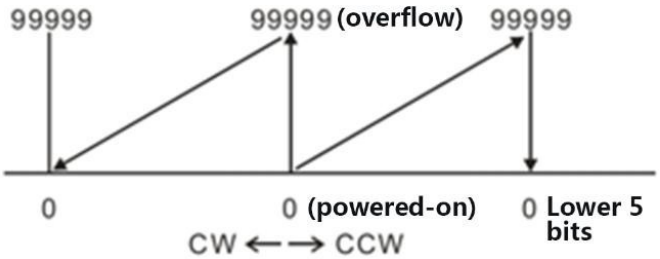

Note 6: (Reason for motor fails to run)

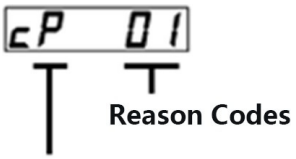

Control: P (Position/ mode) S (Speed mode) t (Torque mode)

Code of reason for motor rotation failure:

Reveal codes	Contents	Correlation Mode	Descriptions
Flashing	Alarm	ALL	It shows an alarm, please check the error code and process it
0	No reason	ALL	The reason why the motor does not run is not detected Normal motor
1	Main power supply is off	ALL	The main power of the servo drive is not connected
2	Servo not enabled	ALL	Enable the servo.
3	The stroke limit signal is valid	ALL	PA_004 = 0 (input enable for stroke limit signal), and the stroke limit switch is started.
4	Too small torque limit setting	ALL	Please set the higher torque limit value
5	The torque limit is effective	ALL	Torque limit setting is incorrect, or its value is too small
6	Command pulse inhibiting (INH) signal is valid	P	The command pulse inhibiting input (INH) signal is valid. Please check the configuration of the corresponding parameter and the corresponding DI input.
7	Command pulse frequency is too low	P	Command pulse input is not correct Or PA_041, PA_042 is not configured correctly Or it has been configured to internal position mode, the command has run to the given position or the command is incorrect
8	CL signal is valid	P	PA_04E=0, and CL signal input active level
9	Zero speed clamp signal is valid;	S/T	PA_006=1, and zero speed clamp signal input active level
10	External analog command is too low	S	External analog mode, and input voltage is too small
11	Internal speed command is 0	S	Input internal speed instruction is too small, no less than 30RPM
12	Torque command is too small	T	Torque command is too small, less than 5%

7.4 Operation instructions

7.4.1 Parameter setting

1. Enter the parameter setting mode

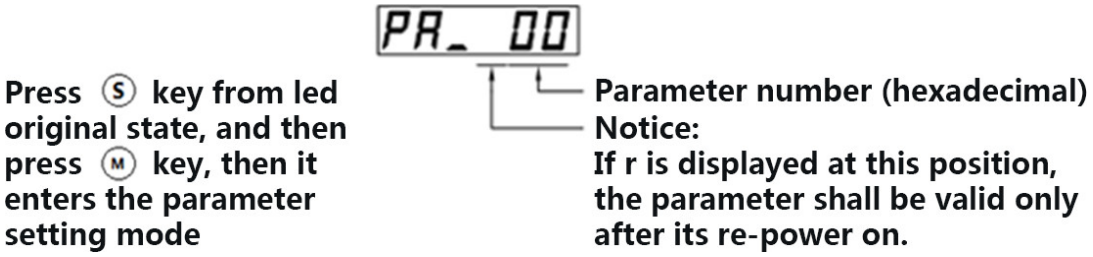

2. Select the target parameter number

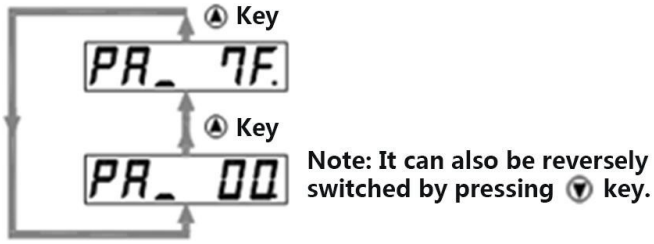

3. After selecting the target parameter number, press the Set key to enter the execution mode.

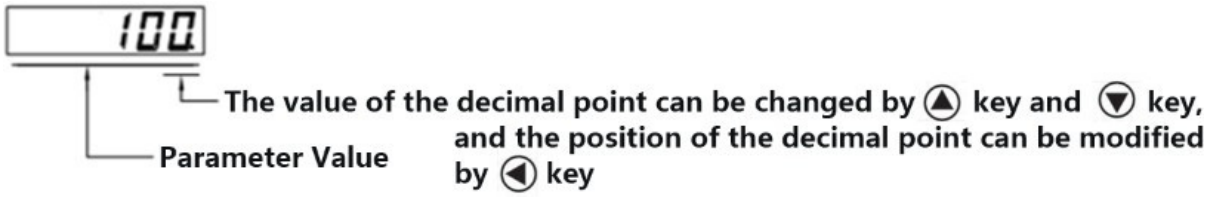

4. Parameter saving mode (EEPROM mode)

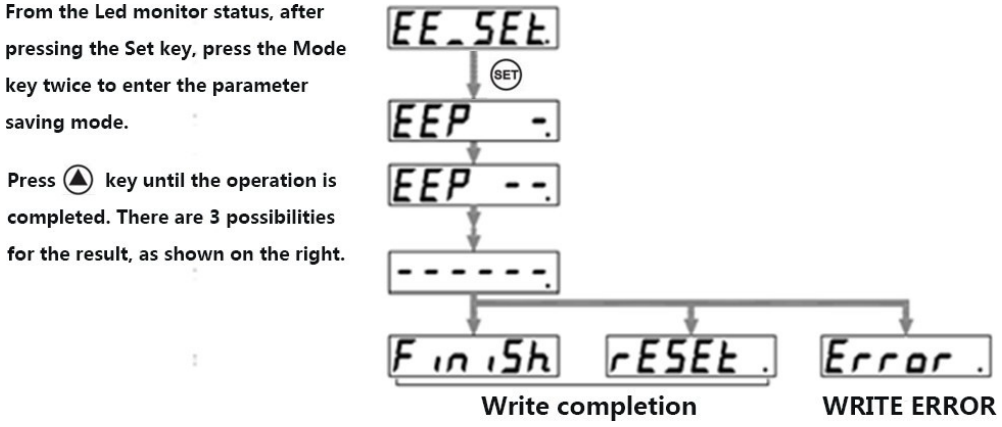

7.4.2 JOG mode

1. After entering the JOG interface and pressing the Set key, press the Mode key four times to switch to the auxiliary function Mode; and then press the "increase key" to switch to the JOG interface, as shown in the following figure:

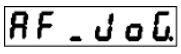

2. Press “Set” key again to enter the execution mode, as shown below

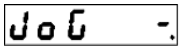

3. Keep pressing the "increase key" until the ready screen appears, as shown below.

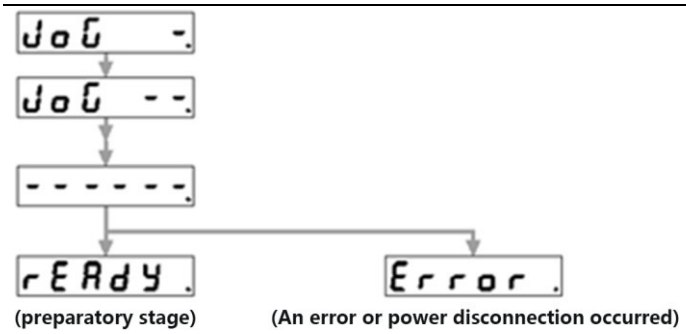

4. Keep pressing the "left shift key" until the servo enabling state appears, as shown in the figure below

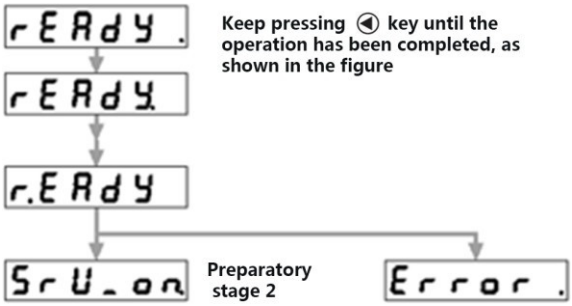

5. Rotate the motor

Press the "increase key", the motor rotates in the CCW direction at the Jog setting speed;

Press the "decrease key", the motor rotates in the CW direction at the Jog setting speed.

7.4.3 Initialization parameter

1. After pressing the Set key, press the Mode key four times to switch to the auxiliary function Mode; and then press the "increase key" to switch to the <Restore factory parameters> interface, as shown in the following figure:

2. Press “Set” key again to enter the execution mode, as shown below

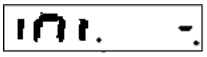

3. Keep pressing the "increase key" until the ready screen appears, as shown below.

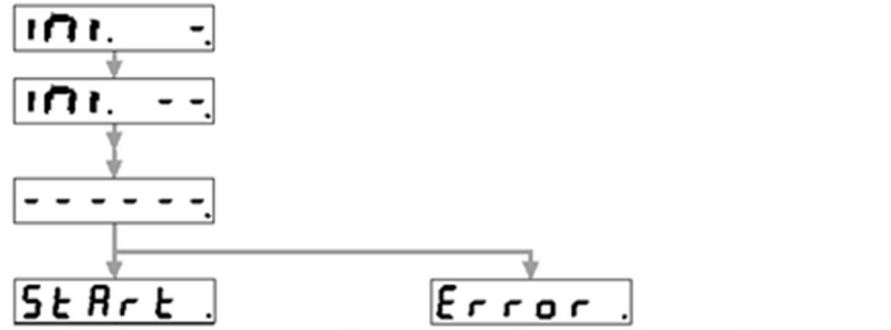

4. Keep pressing the "left shift key" until the restore parameter completion or failure status appears, as shown in the figure below

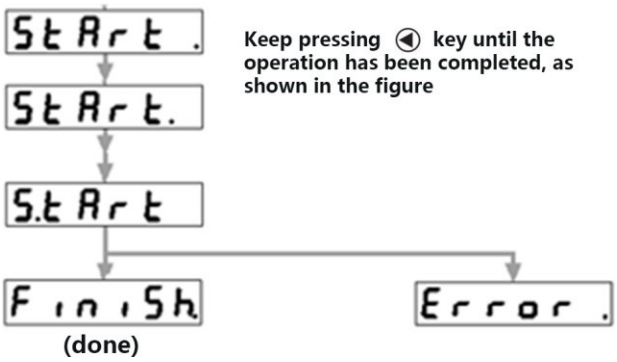

7.4.4 Servo back to zero

1. After pressing the Set key, press the Mode key four times to switch to the auxiliary function Mode; and then press the "increase key" to switch to the <Servo back to zero > interface, as shown in the following figure:

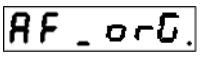

2. Press “Set” key again to enter the execution mode, as shown below

3. Keep pressing the "increase key" until the ready screen appears, as shown below.

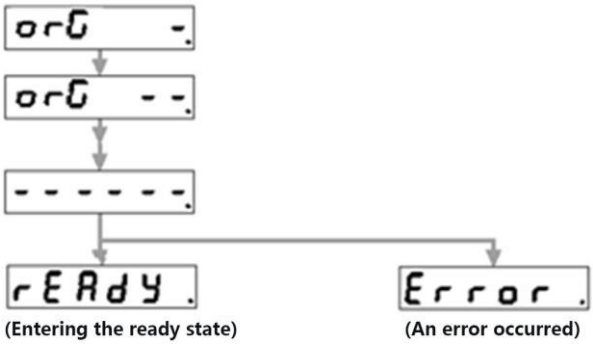

4. Keep pressing the "left shift key" until the zeroing is in progress, and finally find the origin or failure, as figure shown below

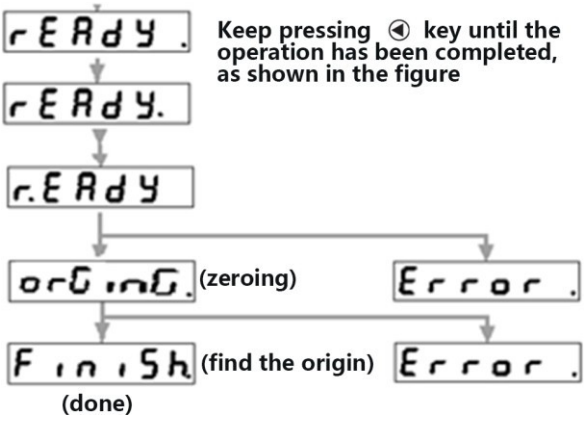

7.4.5 Alarm Clearing

1. After pressing the Set key, press the Mode key four times to switch to the auxiliary function Mode; and then press the "increase key" to switch to the <Alarm Clearing> interface, as shown in the following figure:

AF_AcL.

2. Execute alarm clearing, and press "Set" key again to enter the execution mode, as shown below

AF-AcL.

3. Next, keep pressing the “Increase key” until the operation is completed, as figure shown below:

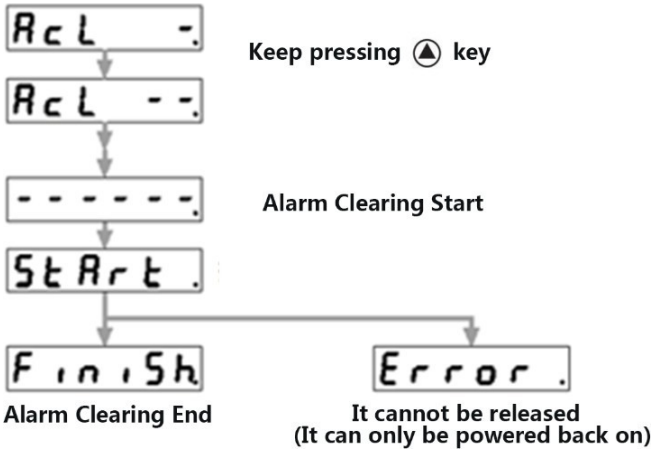

Chapter 8 Alarm Description

Protection Function	Alarm code	Cause of fault	Measure
Overvoltage	12	1. External source input voltage is much greater than 220VAC 2. Resistance braking function was not started 3. In case disconnected wiring, whether the braking resistor is damaged, and whether the brake pipe is damaged 4. Braking energy is too large	1. Replace the appropriate input power immediately 2. Check brake function (PA_06C) configuration, and reset 3. Rewire or repair 4. Increase the reduction time; replace the resistor with smaller resistance and higher power.
Undervoltage	13	1. The main power supply has no voltage but with input; the external main power input voltage is too small	1. Check if the input voltage of the power supply is correct, and correct it
Overcurrent and grounding errors	14	1. Short circuit between motor line UVW 2. Short circuit of motor line UVW and earth (metal case) 3. Hardware circuit is damaged	1. Rewire or replace the problematic cable 2. Replace the cable or replace the motor 3. Replace drives
Over heating	15	1. Use internal braking resistor with braking energy greater than 25W 2. Driver selection power is too small 3. IPM module or IGBT is damaged	1. Please use the external brake resistor and disconnect the wiring of the internal brake resistor 2. Choose a drive with higher power 3. Replace the drive
Excessive load	16	1. The actual torque is too large for a long time that exceeds the P72 set value. 2. Whether the system is vibrated 3. Accelerate too fast 4. Incorrect electrical angle measurement	1. Please check if there is any problem with the machine, causing the resistance increase, or replace the higher power drive or reduce the load. 2. Reduce system gain so that it will not cause vibration 3. Extend the acceleration time 4. Check if the power line UVW is wired or not; or whether there is any problem with the encoder
Regenerative discharge resistance overload (over-braking rate is too large)	18	1. Wiring disconnection, brake pipe damage, or brake resistor damage 2. Braking energy is too large	1. Wiring correction, or repair it 2. Replace the external braking resistor, reduce the resistance value, and increase the power. Resistance should not be less than 35 ohms; increase the reduction time, slow down speed; reduce start-stop frequency; replace drive

			with higher power or reduce load; reduce torque limit value
Encoder error	21	1. Encoder wiring problems or disconnection 2. Encoder damages 3. Interference	1. Corrected wiring 2. Replace the encoder or motor 3.Check whether the system wiring is standardized, replace the twisted pair shielded cable, and separate the coded line from the power line.
Excessive position deviation	24	1. The position command is not fast enough, and the gain is too small 2. Insufficient torque 3. Position deviation level setting is too small 4. Command pulse frequency is too high that exceeds system capability 5. The acceleration of the command is too fast 6. The motor is stuck 7. The motor itself cannot be turned	1. Check speed loop gain, position loop gain, and properly adjust them 2. Turn the torque limit value higher or replace the larger power driver 3. Turn the position deviation larger 4. Reduce the frequency of pulses 5. Reduce the acceleration of the command pulse or lengthen the acceleration time6 6. Check the connection between the motor and the machine. 7. The power line UVW wiring is incorrect, or the encoder wiring is incorrect, or the encoder and motor are damaged.
Overspeed	26	1. Motor overshoot 2. The motor UVW wiring is incorrect 3. The encoder wiring is incorrect	1. The PID parameter is not properly adjusted, or the given command is close to the maximum speed (1.2 times of the rated speed) 2. Change the UVW wiring again 3. Re-update the encoder wiring
Command pulse division frequency error	27	1. The electronic gear setting is incorrect.	1. Modify the electronic gear ratio numerator and denominator
Deviation counter overflow	29	1. The motor is stuck 2. Command pulse exception	1.Check the connection between the motor and the machine 2.Command pulse exception
EEPROM parameter error	36	1. EEPROM read-write error	1. Re-restore the factory parameters, if not, the servo should be repaired
Stroke limit input signal error	38	1. If PA_003 is set to 2, and any travel limit signal is valid and an error is reported. Or ifPA_003=0, the two travel	1. Check if the travel limit signal is valid; also check if the P8D polarity configuration of the travel limit is

		limit signals are valid simultaneously.	correct. The default invalid means that the optocoupler is not conducting, which is the opposite of the polarity of Panasonic.
Analog command overvoltage	39	1. The input analog voltage is greater than the set value of P71	1. Modify the PA_071 setting value (to increase the size) or reduce the external voltage command value.
Absolute encoder power failure alarm	40	1. The encoder battery voltage is insufficient, 2. The encoder battery cable is disconnected.	1. Replace the battery; 2. Check the battery wiring Note: Please replace the battery when the power is on to prevent the absolute position from being lost. This alarm can be reset by the alarm clear function, and the operation steps are shown in section 7.4.5.
system error	1	system error	1. Restore the factory parameters, if not, the drive should be repaired
DI configuration error	2	1. For PA_080 ~ PA_085 parameters, if there are two same values (except 22), then an error will be reported	1. Set the parameters differently, or 22 (invalid),
Communication Errors	3	1. Abnormal ModBus communication	1. Check if the communication line is broken; check if the main station suddenly stops accessing the servo
The control power is off	4	1. The control power is off	2. RE-POWER ON
Fpga internal error	5	1. FPGA internal error	1. Restore the factory parameters, if not, the drive should be repaired
Zeroing timeout	6	1: The origin has not been found for a long time	1. Check if the zeroing-relevant sensor input is working properly 2. Check if the zeroing mode is consistent with the current mechanical installation mode, that is, whether the zeroing mode is set correctly. 3. Encoder Z phase missing

Chapter 9 MODBUS RTU Agreement

Through Modbus communication, it is possible to read back any state in the drive and control the servo without pulse or analog control, even the input/output IO can be omitted. The following is a brief introduction of the three commands of the Modbus protocol supported by the servo: read parameter command (CMD = 0x03), write single parameter command (CMD = 0x06) and write multiple parameter command (CMD = 0x10).

This series of driver communication parameters: 8 data bits, 1 stop bit, parity is even parity; baud rate is modified by PA_00D, station number is modified by PA_000; the hexadecimal communication address of the parameter is the parameter serial number (eg PA_04A The address is 0x4A), the decimal address is the value in the brackets in the parameter table

9.1 Read Parameter Command

Command sent by the master station (PLC, etc.):

Byte Order	Command examples	Function symbol	Feature
1st Byte	0x01	Slave Addr	Slave address, here is 1
2nd Byte	0x03	CMD	Function code, here is 0x03, means it's a "read parameter command"
3rd Byte	0x01	Start AddrH	The higher 8 bits of the starting address of the read parameter
4th Byte	0x2C	Start AddrL	The lower 8 bits of the starting address of the read parameter
5th Byte	0x00	Num_ High (Byte)	The higher 8 bits of the read parameter number. Note: The number here refers to the register number (words) rather than byte number.
6th Byte	0x04	Num_Low (Byte)	The lower 8 bits of the read parameter number.
7th Byte	0x84	CRC_H	The high bits of the CRC check. The CRC checkout means the First ～former's (This is the 6th byte)'s CRC checkout and
8th Byte	0x3C	CRC_L	low bit of the CRC check.

[Example above: The master station read 4 parameters to the slave address 1 and the start address 300 (0x012C), i.e. read 8 bytes]

Slave (servo drive) response:

Byte Order	Command examples	Function symbol	Feature
1st Byte	0x01	Slave Addr	Slave address, here is 1
2nd Byte	0x03	CMD	Function code, 0x03, corresponding to the master command
3rd Byte	0x08	Data Lenth	The data length of the response, unit in bytes
4th Byte	0x00	Data (0)	Data 0 (higher bit of the 1st register)

5th Byte	0x64	Data (0)	Data 0 (lower bit of the 1st register)
6th Byte	0x00	Data (1)	Data 1 (higher bit of the 2nd register)
7th Byte	0xC8	Data (1)	Data 1 (lower bit of the 2nd register)
8th Byte	0x01	Data (2)	Data 2 (higher bit of the 3rd register)
9th Byte	0x2C	Data (2)	Data 2 (lower bit of the 3rd register)
10th Byte	0x01	Data(n*2-2)	Data (n*2-2) (higher bit of the Nth register)
11th Byte	0x90	Data(n*2-1)	Data (n*2-1) (higher bit of the Nth register)
12th Byte	0x90	CRC_H	The high bits of the CRC check. The CRC checkout means the First ～former's (This is the 9th byte)'s CRC checkout and
13th Byte	0x08	CRC_L	low bit of the CRC check.

[Respondent data0: 0x0064; data1:0x01C8; data2:0x012C; data3:0x0190]

9.2 Write Single Register Command (0x06)

Command sent by the master station (PLC, etc.):

Byte Order	Command examples	Function symbol	Feature
1st Byte	0x01	Slave Addr	Slave address, here is 1
2nd Byte	0x06	CMD	Function code, here is 0x06, means it's a "write parameter command"
3rd Byte	0x01	Start AddrH	The higher 8 bits of the starting address of the written parameter
4th Byte	0x2C	Start AddrL	The lower 8 bits of the starting address of the written parameter
5th Byte	0x01	DATA (0)	The higher 8 bits of written data.
6th Byte	0x90	DATA (1)	The lower 8 bits of written data.
7th Byte	0x48	CRC_H	The high bits of the CRC check. The CRC checkout means the First ～former's (This is the 6th byte)'s CRC checkout and
8th Byte	0x03	CRC_L	low bit of the CRC check.

[Example above: The master station writes 1 parameter to the slave address 1 and the start address 300 (0x012C), with the value of 400 (0x0190)]

Slave (servo drive) response:

Byte Order	Command examples	Function symbol	Feature
1st Byte	0x01	Slave Addr	Slave address, here is 1
2nd Byte	0x06	CMD	Function code, 0x06, corresponding to the master

			command
3rd Byte	0x01	Start AddrH	The higher 8 bits of the starting address of the written parameter
4th Byte	0x2C	Start AddrL	The lower 8 bits of the starting address of the written parameter
5th Byte	0x01	DATA (0)	The higher 8 bits of written data.
6th Byte	0x90	DATA (1)	The lower 8 bits of written data.
7th Byte	0x48	CRC_H	The high bits of the CRC check. The CRC checkout means the First ～former's (This is the 6th byte)'s CRC checkout and
8th Byte	0x03	CRC_L	low bit of the CRC check.

[Answer and the master station send the same command]

9.3 Write Multi-Register Command (0x10)

Command sent by the master station (PLC, etc.):

Byte Order	Command examples	Function symbol	Feature
1st Byte	0x01	Slave Addr	Slave address, here is 1
2nd Byte	0x10	CMD	Function code, here is 0x10, means it's "write multi-parameter command"
3rd Byte	0x01	Start AddrH	The higher 8 bits of the starting address of the written parameter
4th Byte	0x2C	Start AddrL	The lower 8 bits of the starting address of the written parameter
5th Byte	0x00	NUM_H	The higher 8 bits of the written parameter(register) number.
6th Byte	0x04	NUM_L	The lower 8 bits of the written parameter(register) number.
7th Byte	0x08	Data Length	The number of bytes written by the parameter is twice the number of registers.
8th Byte	0x03	DATA (0)	The higher 8 bits of the 1st written data.
9th Byte	0xE8	DATA (0)	The lower 8 bits of the 1st written data.
10th Byte	0x07	DATA (1)	The higher 8 bits of the 2nd written data.
11th Byte	0xD0	DATA (1)	The lower 8 bits of the 2nd written data.
12th Byte	0x0B	DATA (1)	The higher 8 bits of the 2nd written data.
13th Byte	0xB8	DATA (1)	The lower 8 bits of the 2nd written data.
		…	(If the number of bytes is greater than 4, there are other data here)
14th Byte	0x0F	DATA(n*2-2)	The higher 8 bits of the Nth written data.
15th Byte	0xA0	DATA(n*2-1)	The lower 8 bits of the Nth written data.
16th Byte	0x4A	CRC_H	The high bits of the CRC check. The CRC checkout means the First ～former's (This is the 6th byte)'s CRC checkout and
17th Byte	0xA3	CRC_L	low bit of the CRC check.

[Example above: The master station writes 4 parameters to the slave address 1 and the start address 300 (0x012C), as of 1000(0x03E8),]
2000(0x07D0)、3000（0x0BB8)、4000(0x0FA0)]

Slave (servo drive) response:

Byte Order	Command examples	Function symbol	Feature
1st Byte	0x01	Slave Addr	Slave address, here is 1
2nd Byte	0x10	CMD	Function code, 0x10, corresponding to the master command
3rd Byte	0x01	Start AddrH	The higher 8 bits of the starting address of the written parameter
4th Byte	0x2C	Start AddrL	The lower 8 bits of the starting address of the written parameter
5th Byte	0x00	NUM_H	The higher 8 bits of the written parameter number (register number).
6th Byte	0x04	NUM_L	The lower 8 bits of the read parameter number (register number).
7th Byte	0x01	CRC_H	The high bits of the CRC check. The CRC checkout means the First ～former's (This is the 6th byte)'s CRC checkout and
8th Byte	0xFF	CRC_L	low bit of the CRC check.

9.4 Abnormal response and error codes

In case abnormal slave station response regardless of written or read command, and its response frame will change. As following:

Byte Order	Command examples	Function symbol	Feature
1st Byte	0x01	Slave Addr	Slave address, here is 1
2nd Byte	0x06	CMD|0x80	Function code highest position 1
3rd Byte	0x04	Error Code	Error code. There are the following types: 0x02: The address is illegal. 0x03: The data is illegal 0x04: Th execution is refused
4th Byte	0x10	CRC_H	The high bits of the CRC check. The CRC checkout means the First ～former's (This is the 3rd byte)'s CRC checkout and
5th Byte	0x00	CRC_L	low bit of the CRC check.

9.5 Communication saving parameters

PA_1A7 [423]	Communication function code	H801----- Save all parameters

Appendix: Servo zeroing mode

Zeroing mode 0: refer to the origin mode of negative origin switch and Z phase signal

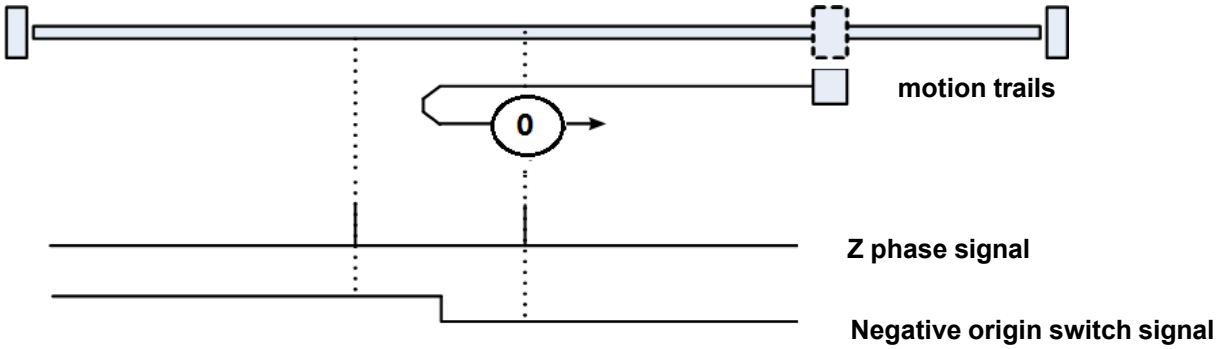

The home switch is in the negative direction of the machine. The machine moves to the origin switch direction, decelerates and stops after detecting the origin switch, then reverses and exits the origin switch, finds the next Z-phase signal of the motor and records the position as the origin, and the motor stops immediately.

Zeroing mode 1: refer to the origin mode of positive origin switch and Z phase signal

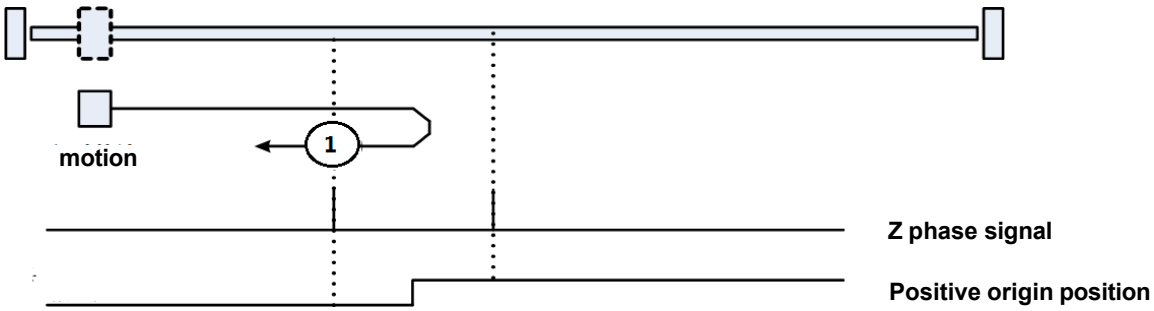

The home switch is in the positive direction of the machine. The machine moves to the origin switch direction, decelerates and stops after detecting the origin switch, then reverses and exits the origin switch, finds the next Z-phase signal of the motor and records the position as the origin, and the motor stops immediately.

Zeroing mode 2: refer to the origin mode of negative travel limit switch and Z phase signal

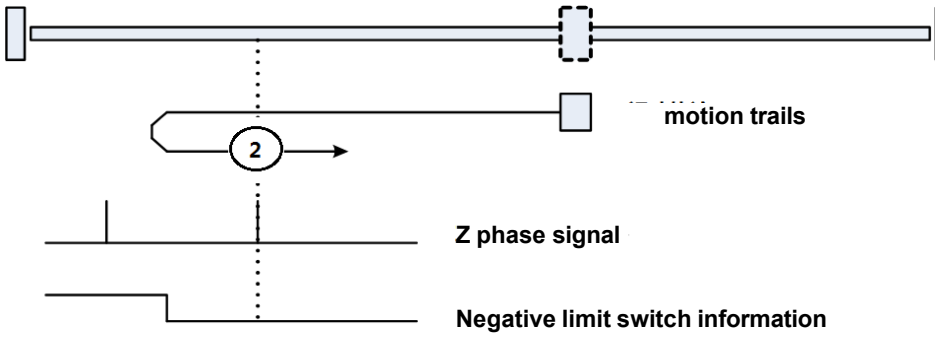

The machine moves to the negative (CWL) direction, decelerates and stops after detecting the CWL travel limit switch, then reverses and exits the travel limit switch, finds the next Z-phase signal of the motor and records the position as the origin, and the motor stops immediately.

Zeroing mode 3: refer to the origin mode of positive travel limit switch and Z phase signal

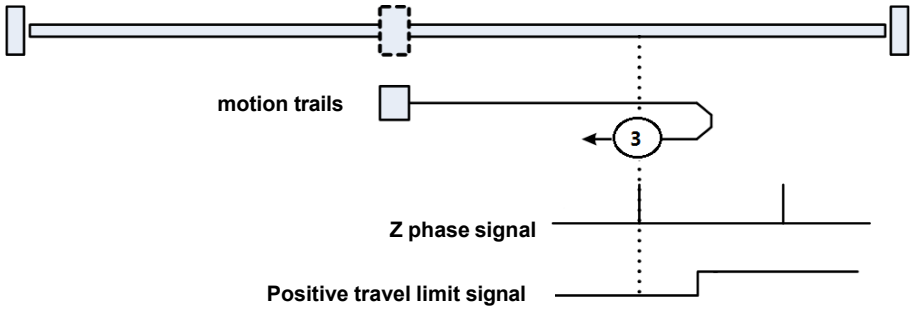

The machine moves to the positive (CCWL) direction, decelerates and stops after detecting the CCWL travel limit switch, then reverses and exits the travel limit switch, finds the next Z-phase signal of the motor and records the position as the origin, and the motor stops immediately.

Zeroing mode 4: refer to the origin mode of negative origin switch

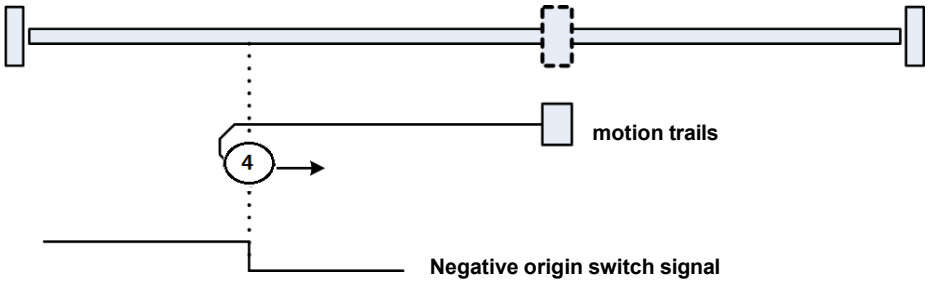

The home switch is in the negative direction of the machine. The machine moves to the origin switch direction, decelerates and stops after detecting the origin switch, then reverses and exits the origin switch, records the falling edge position of the origin switch signal as the origin, and the motor stops immediately.

Zeroing mode 5: refer to the origin mode of positive origin switch

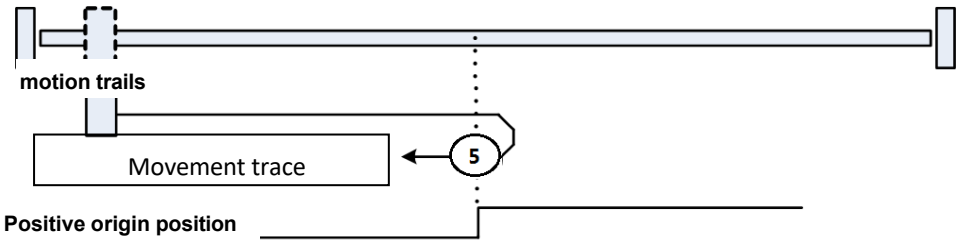

The home switch is in the positive direction of the machine. The machine moves to the origin switch direction, decelerates and stops after detecting the origin switch, then reverses and exits the origin switch, records the

falling edge position of the origin switch signal as the origin, and the motor stops immediately.

Zeroing mode 6: refer to the origin mode of the Z phase signal (negative return to the original)

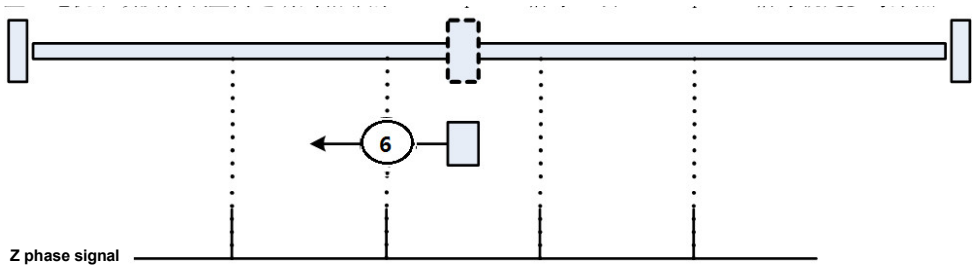

The motor moves from the current position to the negative direction, and the position is recorded as the origin when the next Z-phase signal is found.

Zeroing mode 7: refer to the origin mode of Z phase signal (positive return to the original)

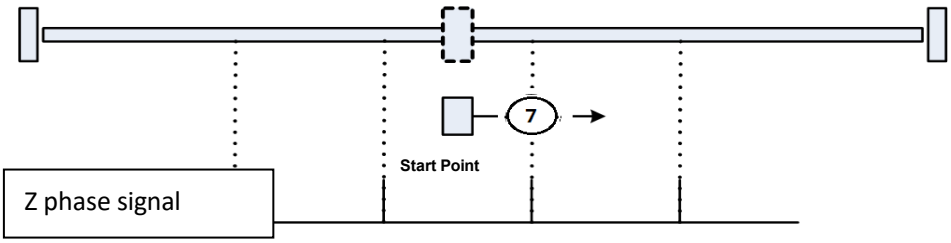

The motor moves from the current position to the positive direction, and the position is recorded as the origin when the next Z-phase signal is found.

Zeroing mode 8: Refer to the origin mode of home switch, Z-phase signal and positive limit (take the z-phase signal left Z-phase signal of left edge

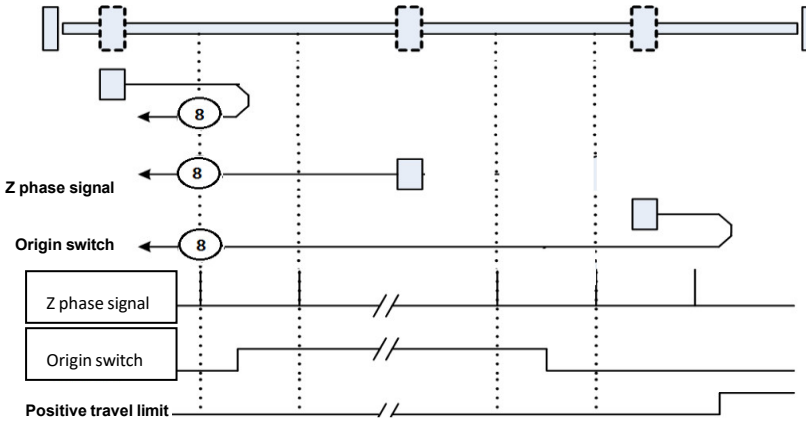

As shown in the figure above, the mechanical slider slides in the positive limit direction (positive direction), and the Z-phase signal is in the left position of the left edge of the origin switch signal, that is, outside the effective range of the origin switch signal.

When the machine is in the range of the origin switch (mechanical motion track 2), it can run to the negative direction to find the origin; when the machine is outside the range of the origin switch (mechanical motion track 1 and mechanical motion track 3), the machine constantly run to the direction of the limit switch (positive direction), then the movement track can be obtained by the detected origin switch and the limit switch sequence, thus the origin can be found.

Return mode 9: Refer to the origin mode of home switch, Z-phase signal and positive limit (take the right Z-phase signal of left edge
of positive origin switch)

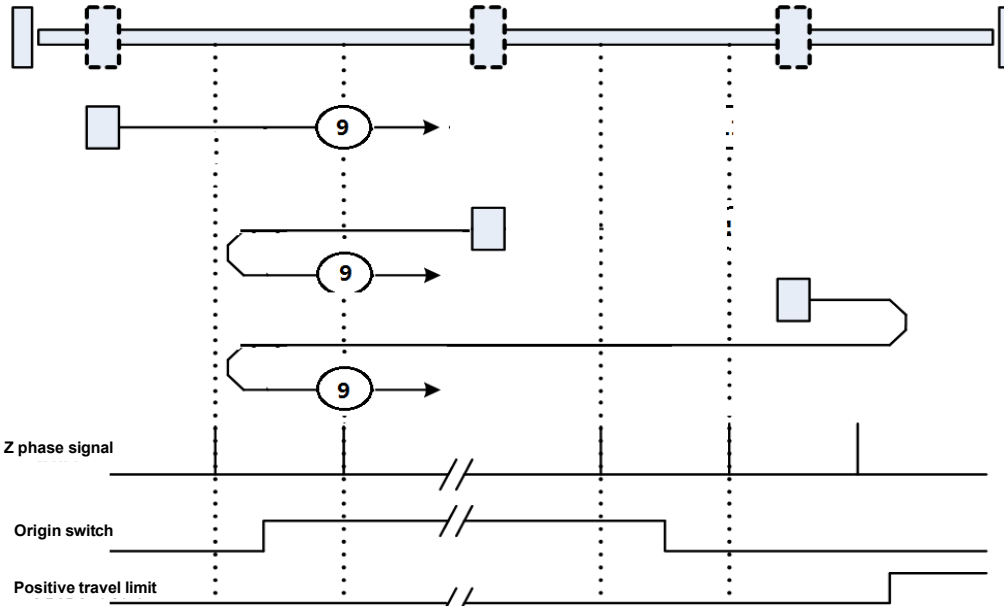

As shown in the figure above, the mechanical slider slides in the positive limit direction (positive direction), and the Z-phase signal is in the right position of the left edge of the origin switch signal, that is, within the effective range of the origin switch signal.

When the machine is in the range of the origin switch (mechanical motion track 2), it can run to the negative direction to find the origin; when the machine is outside the range of the origin switch (mechanical motion track 1 and mechanical motion track 3), the machine constantly run to the direction of the limit switch (positive direction), then the movement track can be obtained by the detected origin switch and the limit switch sequence, thus the origin can be found.

Zeroing mode 10: Refer to the origin mode of home switch, Z-phase signal and positive limit (take the left Z-phase signal of right edge of positive origin switch)

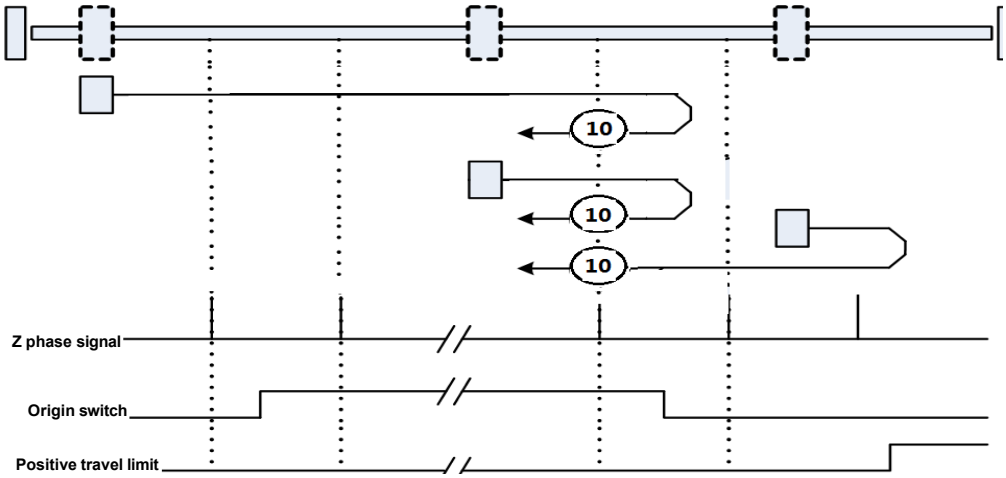

As shown in the figure above, the mechanical slider slides in the positive limit direction (positive direction), and the Z-phase signal is in the left position of the right edge of the origin switch signal, that is, within the effective range of the origin switch signal.

When the machine is in the range of the origin switch (mechanical motion track 2), it can run to the positive direction to find the origin; when the machine is outside the range of the origin switch (mechanical motion track 1 and mechanical motion track 3), the machine constantly run to the direction of the limit switch (positive direction), then the movement track can be obtained by the detected origin switch and the limit switch sequence, thus the origin can be found.

Zeroing mode 11: Refer to the origin mode of home switch, Z-phase signal and positive limit (take the right Z-phase signal of right edge
of positive origin switch)

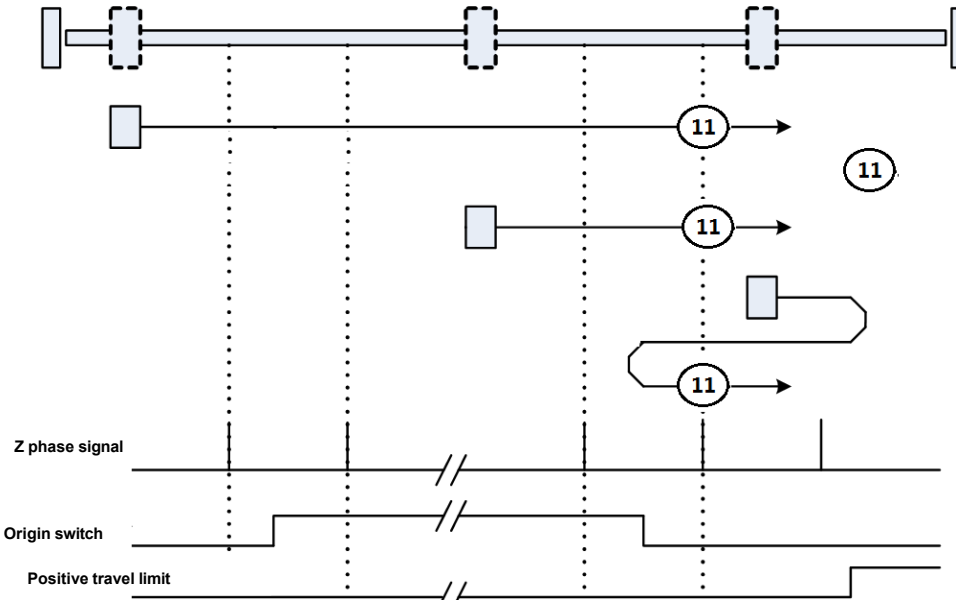

As shown in the figure above, the mechanical slider slides in the positive limit direction (positive direction), and the Z-phase signal is in the right position of the right edge of the origin switch signal, that is, outside the effective range of the origin switch signal.

When the machine is in the range of the origin switch (mechanical motion track 2), it can run to the positive direction to find the origin; when the machine is outside the range of the origin switch (mechanical motion track 1 and mechanical motion track 3), the machine constantly run to the direction of the limit switch (positive

direction), then the movement track can be obtained by the detected origin switch and the limit switch sequence, thus the origin can be found.

Zeroing mode 12: Refer to the origin mode of home switch, Z-phase signal and negative limit (take the right Z-phase signal of right edge of positive origin switch)

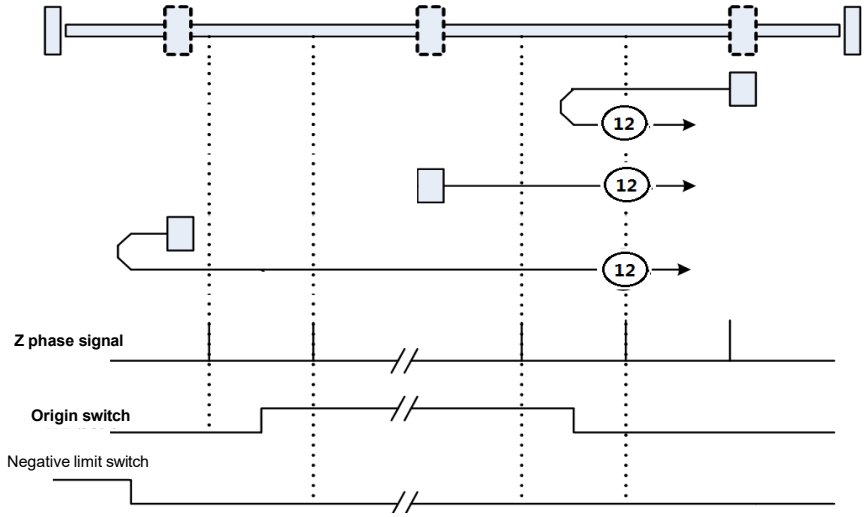

As shown in the figure above, the mechanical slider slides in the negative limit direction (negative direction), and the Z-phase signal is in the right position of the right edge of the origin switch signal, that is, outside the effective range of the origin switch signal.

When the machine is in the range of the origin switch (mechanical motion track 2), it can run to the positive direction to find the origin; when the machine is outside the range of the origin switch (mechanical motion track 1 and mechanical motion track 3), the machine constantly run to the direction of the limit switch (negative direction), then the movement track can be obtained by the detected origin switch and the limit switch sequence, thus the origin can be found.

Zeroing mode 13: Refer to the origin mode of home switch, Z-phase signal and positive limit (take the z-phase signal left Z-phase signal of left edge

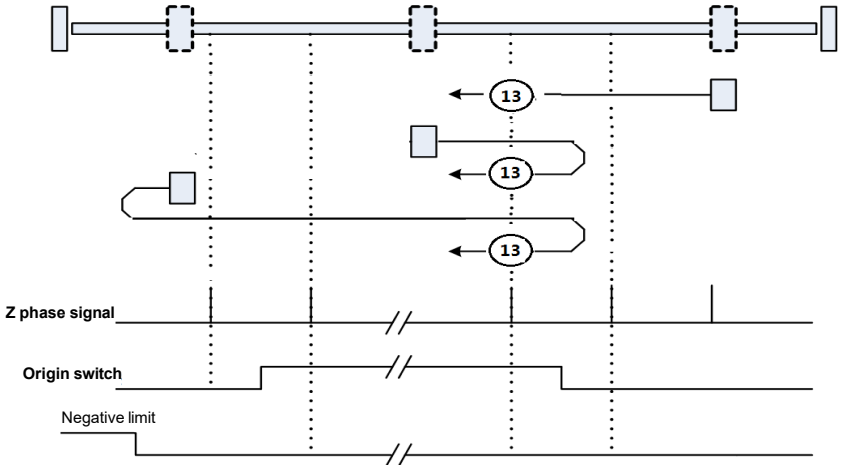

As shown in the figure above, the mechanical slider slides in the negative limit direction (negative direction), and the Z-phase signal is in the left position of the right edge of the origin switch signal, that is, within the effective range of the origin switch signal.

When the machine is in the range of the origin switch (mechanical motion track 2), it can run to the positive direction to find the origin; when the machine is outside the range of the origin switch (mechanical motion track 1 and mechanical motion track 3), the machine constantly run to the direction of the limit switch (negative direction), then the movement track can be obtained by the detected origin switch and the limit switch sequence, thus the origin can be found.

Zeroing mode 14: Refer to the origin mode of home switch, Z-phase signal and negative limit (take the z-phase signal right Z-phase signal of left edge

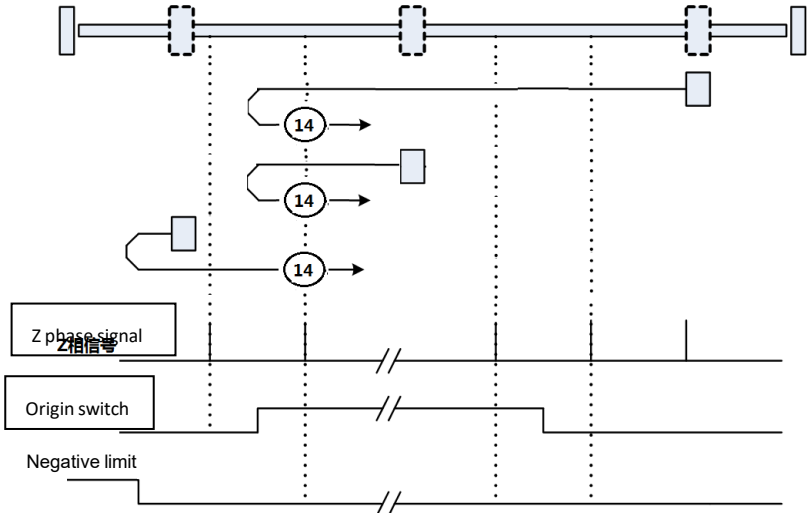

As shown in the figure above, the mechanical slider slides in the negative limit direction (negative direction), and the Z-phase signal is in the right position of the left edge of the origin switch signal, that is, within the effective range of the origin switch signal.

When the machine is in the range of the origin switch (mechanical motion track 2), it can run to the negative direction to find the origin; when the machine is outside the range of the origin switch (mechanical motion track 1 and mechanical motion track 3), the machine constantly run to the direction of the limit switch (negative direction), then the movement track can be obtained by the detected origin switch and the limit switch sequence, thus the origin can be found.

Zeroing mode 15: Refer to the origin mode of home switch, Z-phase signal and negative limit (take the left Z-phase signal of left edge
of positive origin switch)

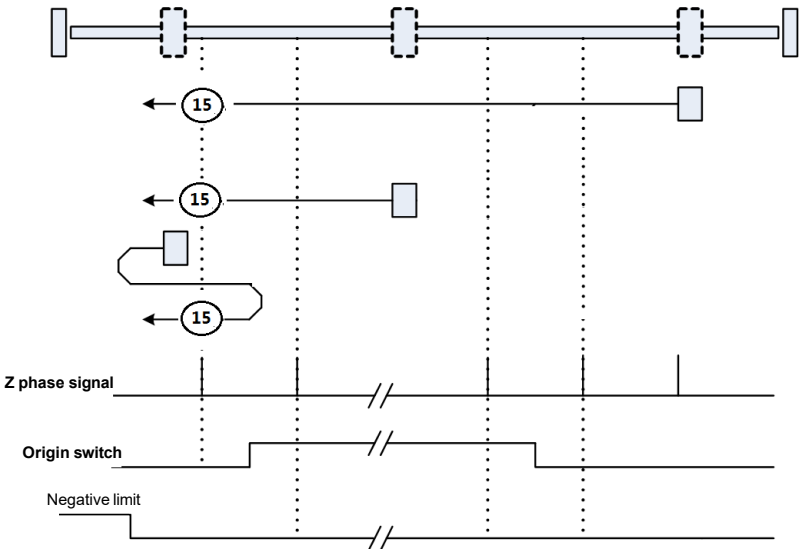

As shown in the figure above, the mechanical slider slides in the negative limit direction (negative direction), and the Z-phase signal is in the left position of the left edge of the origin switch signal, that is, outside the effective range of the origin switch signal.

When the machine is in the range of the origin switch (mechanical motion track 2), it can run to the negative direction to find the origin; when the machine is outside the range of the origin switch (mechanical motion track 1 and mechanical motion track 3), the machine constantly run to the direction of the limit switch (negative direction), then the movement track can be obtained by the detected origin switch and the limit switch sequence, thus the origin can be found.